SECTION 8

ACTIVE ANALYSIS SEGMENT

Results obtained from the ACTIVE RC synthesis segment require confirmation and sometimes further modifications. We must find specific configurations and element values to implement the individual second order sections. All of this and more, can be accomplished by the ACTIVE ANALYSIS segment which we enter automatically upon completion of the synthesis step.

As usual, we can use any of the commands in any sequence any number of times. When commands need additional data, it may be entered together with the command in free format, just as in other analysis segments. Otherwise, we wait for the program to request the data in conversational mode. Some of the commands are identical to those discussed earlier, others are specific to active RC filters. The backup symbol BRK or its alias BAK, are acceptable ways to return to an earlier point in the data input sequence or abort a command. STOP will terminate program execution.

8.1 COMMANDS

Before explaining how to use this segment, we will describe, in alphabetical order, the commands applicable to active RC filter design.

8.1.1 ADD (add a section)

This command adds a second order section to the end of the current filter. If needed, appropriate feedback can also be included. Numerator and denominator coefficients, in ascending order, and the feedback coefficient may be entered with the command on a single line in free format. Alternatively, we may wait for the program prompts. Combinations are also possible, but the three coefficients of the numerator and denominator should be kept together. The use of this command is demonstrated in example 8.4.7.

8.1.2 BZT (bilinear Z-transform)

To facilitate the design of switched capacitor filters, an active RC transfer function of any form (cascade, leapfrog or follow-the-leader) may be converted to a sampled data form using this command. It needs the sampling frequency in Hz, which may be entered together with the command.

The resulting transfer function is given in terms of the variable z^{-1} and is computed in such a man- ner, that the (upper) passband edge frequency remains invariant. Any prewarping must have been done previously by doing an additional run through the PLACER or SMAIN segments using the *bilinear digital* option. The *preshifted* values printed as a result of this preliminary run may then be used in the second run which, after using the BZT command, will yield the correct results. For further details, please see *Application Note 9*.

After entering the BZT command, some commands may no longer be available. A diagnostic comment will advise us if this is the case. Any command that does not result in a complaint may be used and will yield correct results, of which the frequency domain analysis is the most important. All original filter data is overwritten and thus lost. However, the filter may be redesigned, inasmuch as the synthesis segment in the single-executable version, or the transfer file in the multi- executable version, still has all the necessary functions stored.

The use of the DES (design) command after BZT is also a bit different. Instead of section-by-section design, we get the design of the complete circuit. Also, instead of a SPICE file, we may write the data in a file acceptable to either the SCASY or the SWITCAP switched-capacitor circuit analysis programs. The use of this command is illustrated in example 8.4.3.

8.1.3 CLR (clear)

See *Section 6.1.3*.

8.1.4 DEL (delete a section)

This command deletes a second order section and its corresponding feedback factor, if present. In the feedback cases (leapfrog and follow-the-leader), deletion of an internal section will have com- pletely unpredictable results on the performance of the remaining circuit! In the cascade case, the effect is to delete a pair of poles and zeros from the transfer function. The command requires the serial number of the section to be deleted. The DEL command is demonstrated in examples 8.4.3 and 8.4.4.

8.1.5 DES (design specific active RC circuit)

It is possible to obtain specific active RC circuits to implement a filter. There are two distinct real- izations available, one using resistors, capacitors and operational (voltage) amplifiers (op-amps); the other using capacitors and operational transconductance amplifiers (voltage-controlled current sources, also designated OTA). The latter one is more useful for high-frequency filters and imple- mentations in integrated circuit form.

There is a difference in the way the DES command operates for these two modes of realizations. The RC - op-amp realization is done one section at a time, because we usually have a choice of two to four different implementations for each section. This is not the case for the capacitor-transconductance amplifier realization. In this case the whole circuit is implemented all at once.

The first time we issue the DES command, we must choose between these implementation meth- ods. From that time onward, this implementations is permanently selected. The *only* way to switch from one to the other is to save the filter data in a file, delete the filter data by using the CLR (clear) command and recall the saved data.

If the capacitor-transconductance amplifier realization is selected, the program needs no addi- tional data, except a (common) capacitance value to be used. Example 8.4.8 demonstrates the capacitor- transconductance amplifier realization of filters.

In the case of RC - op-amp realization, the command needs the section number and a capacitance value for the common (or sometimes maximum) C value to be used in it. The program then selects an appropriate circuit, calculates the corresponding R and C values, and prints the circuit together with the element values. All available circuits use operational amplifiers as active elements, which the program assumes to be ideal. The circuit is selected on the basis of the pole Q value classified in three regions:

Low-Q: $Q < 2$

Medium-Q: $2 < Q < 20$

High-Q: $20 < Q$

For low- and medium-Q, as well as for first order sections, the program selects an appropriate single op-amp circuit. We usually have no choice with the exception of the medium-Q lowpass or highpass notch circuit (a section with a finite transmission zero), where two circuits are available: one with a twin-T RC circuit and one without. Both are provided because one or the other may not be realizable or may not have desirable element values. In this case the program will ask us which one we want. Since the step may be repeated, both may be obtained and compared.

For high-Q cases, there are two circuits available also, one with two op-amps, the other with three. We will be prompted to select the one we want. If the Q is infinite (FLF or leapfrog structures), only the three op-amp circuit may be used.

The only other choice we have is to specify the common (or maximum) capacitor value. Some resistor values are still free, but they are all chosen by the program. These values are selected to minimize resistor value spread, or else a 10 kohm value is arbitrarily specified. The computer-selection and all associated resistors can be readily identified by invoking this command twice with different C values. Those resistors which remain unchanged, are tied to each other and may be arbitrarily scaled as a group. Note also that for multiple op-amp circuits, only the last op-amp, whose output is the section output, is scaled properly. Internal op-amps are not scaled for maximum dynamic range and thus should be investigated in every case.

The feedback paths of the leapfrog and follow-the-leader structures are *not* included in the design, although their presence is appropriately indicated. This is due to the fact that the DES command yields designs on a section-by-section basis, and consequently at no time does the program have complete information about the realization of *all* sections. Hence proper feedback paths cannot be designed automatically, since they depend on the specific circuits of both sections i.e., the one that provides the voltage to be fed back, and the other which receives the feedback signal. For the same reason, the resulting circuits may not be used for analysis.

There is a way to force the program to give us a low-, medium- or high-Q implementation of the section regardless of the actual value of the pole Q. It consists in simply entering *all* of the data shown, on a single line:

DES n C i

DES is the command, 'n' is the section number, 'C' is the value of the capacitance, as explained above, and 'i' is an integer indicator of possible values 1, 2 or 3, which causes the Q selection to be low-, medium- or high-Q respectively. Of course, some of these sections may not be realizable, but appropriate error messages advise us of nonrealizable sections. One can always find at least one realizable implementation.

The designs of the individual sections are saved internally and when all the sections have been designed, the complete filter data may be written to a file using the FILE command (see below) in ASCII format for documentation or SPICE netlist format. Note that if the same section has been designed several times, only the *last* design is saved. Also the file can be written only if *all* the sections have been implemented. Otherwise we get a message indicating the sections that have not been designed yet.

If we are dealing with a switched-capacitor filter, that is the BZT command has been used before, the DES command yields the complete filter design, using the Fleischer-Laker biquadratic block implementation (see Ref. [39] and Figs. 8.1 and 8.2). In this case, the design can be written into a disk file to be transferred to either of the two switched-capacitor analysis programs, SCASY or SWITCAP.

The DES command usage for RC-op. amp. realizations is demonstrated in examples 8.4.2a, and 8.4.3b, among others.

8.1.6 DISP (display design data)

See *Section 6.1.6*.

8.1.7 DOS (temporarily return to DOS)

See *Section 6.1.7*.

8.1.8 END

See *Section 6.1.10*.

8.1.9 EQU (delay equalization)

This command invokes the delay equalizer subprogram to equalize the delay response of the current filter. It may also be used as a stand-alone program to design active RC delay lines or delay equalizer circuits to specified requirements (see the examples later in this section). The command uses varying amounts of data, which may not be entered with the command. If any data is specified with the command, the data will be ignored.

First we must specify the number of delay equalizer sections to be used. Next we must indicate whether previously calculated delay values are to be used for equalization (if an analysis has been

performed prior to invoking this command), or whether we want the program to calculate the delay from the natural modes. The natural mode option is the only possibility if an analysis has not been done. If more than one analysis has been done, the *last* one is used. Finally we must indicate the frequency range in which the equalization is to be performed.

The subprogram performs an iterative optimization procedure to obtain the equalizer parameters. Then it prints a tabulation of filter delay, equalizer delay, delay sum and delay deviation from the average -- all versus frequency. Options to suppress all tabulated data or to plot the delay deviation are available. The natural modes of the resulting equalizer are also printed.

At this stage, the program offers four choices:

- We can abort the delay equalization step. The original circuit remains unchanged.
- We can perform additional iterations.
- The number of delay equalizer sections may be modified if we see that the equalization is not good enough or too good.
- The current delay equalizer can be incorporated into the filter function.

At this time the command cannot be used for sampled data filters. This limitation can be overcome by conducting a preliminary run using the DIGITAL segment of the program. See also *Applica- tion Note 9*.

8.1.10 FILE (write disk files)

A number of files can be written by the program, either for documentation purposes or to transfer data to other programs. We can currently generate three files in this program segment, one each to transfer data to the SPICE or the SUPER-STAR programs and one, called ASCII, for documentation purposes. Note that these files can only be written if the filter circuit has been designed, i.e. a circuit has been selected for each of the sections (if op-amp implementation was used) or the complete circuit (using OTA's). If the complete design is not available, the program will print an advisory indicating which sections are still missing and will return to the COMMAND prompt.

The ASCII file will contain a summary of the design data, the complete circuit (with the exception of the feedback paths in the op-amp implementation case) and finally a parts list. If the feedback paths are missing, their absence is indicated at the proper places together with their coefficients.

In the case of switched-capacitor filters, transfer files are available to either the SCASY or the SWITCAP programs. These are offered at the time when the DES command is invoked, rather than through the FILE command.

The files will have a program-selected extension (.ASC in the case of the ASCII file), hence, as usual, extension need not be specified when the filename is entered. Filenames proper are restrict- ed to 8 alphanumeric characters, but drive and/or full path names may be specified.

8.1.11 FQ (finite Q)

A number of sections in both the leapfrog and follow-the-leader structures will have an infinite Q. For practical reasons we may want to replace these by a high, but finite Q and then determine the effect of this change on the overall performance. The FQ command can be used to replace infinite Q's with any finite value, while finite-Q sections remain unchanged. The command requires the specified Q. We can enter it together with the command, or we may wait for the prompt.

Since this is an irreversible step, before using it, all original data should be stored so that if the results are unacceptable, the original set of data may be recovered. The use of this command is illustrated in example 8.4.7.

8.1.12 FREQ (frequency domain analysis)

This command is nearly identical in all analysis segments. It requires various amounts of data, for which we must be prompted. The first prompt is for the frequencies (ENTER FREQ:). The program accepts input up to five consecutive times, in any of the following forms:

- FA, FB, DF -- all on a single line, where FA is the starting frequency, FB (>FA) is the ending frequency and DF (<FB) is the frequency increment for a linear sweep.

- FA, FB, -N -- all on a single line, where FA and FB are as above, but frequencies are selected logarithmically, N frequencies per decade (N is an integer).

- F1, F2, F3, -- where (F1 < F2 < F3 < ...) are individual frequencies, from 1 to 25 on a line.

All frequencies must be entered in Hz. The frequencies so specified will be generated, sorted, merged, duplicates eliminated and the first 501 values will be used for the analysis. If we do not need 5 prompts to specify all frequencies, a carriage return or END will terminate the prompt. If the very first value entered is negative (it may not be zero) *all* values entered subsequently are interpreted to be in rad/sec units.

Finally, we are asked if we wish the results tabulated, since they can also be displayed graphically at the conclusion of the analysis. Plotting is available in character-plotting mode for terminals of either 132 character long lines (WIDE) or 80 character long lines (NARROW) or, if we use one of the graphics terminals the program supports, in true graphics mode. On the personal computer, we must save the analysis data in a file and use the stand-alone GRAPH utility to display the re- sults in graphics mode.

If we repeat the analysis and wish to use the same frequencies again, we may enter either a slash (/) or the keyword OLD as the answer to the first prompt. If we enter the keyword MAX in place of DF, the program calculates an increment that yields 501 frequencies.

Please note, that the analysis is performed from the transfer function as displayed by the print (PRI) command, *not* from the element values of any implementation. For the actual analysis of the implementation, you will need a SPICE program or its equivalent. The program can generate a netlist file to transfer data to SPICE (see the FILE command above).

This command is demonstrated throughout the manual.

8.1.13 FS (frequency scaling)

See *Section 6.1.15*.

8.1.14 HELP

See *Section 6.1.16*.

8.1.15 LBL (new title)

See *Section 6.1.21*.

8.1.16 MULT (multiply section)

Occasionally, we may wish to multiply the transfer function of a section by a constant, even though this will modify the dynamic range of the overall circuit somewhat. For instance, this may happen if an active RC realization provides a fixed multiplier that is different from what we want. If it does, such a multiplier can be absorbed into the overall transfer function by multiplying this section by the indicated value and multiplying another section transfer function by its inverse; the feedback loop gains are then automatically adjusted. The command requires the section serial number and the multiplier. We may enter these with the command, or we may wait for the prompts. The use of this command is shown in example 8.4.5.

8.1.17 PERM (permute)

This command permutes the numerator or denominator factors of a cascade realization. It needs an indicator (N or D) to tell the program whether the numerator factors or the denominator factors are to be permuted respectively. This is followed by the permuted set of serial numbers which can be entered only after the prompt. The factors will be properly rearranged. Only a brief com- ment is printed that the operation was performed. After a permutation, a rescaling (RESC) oper- ation is recommended to reset the dynamic range. The use of this command is demonstrated in examples 8.4.4a.

8.1.18 PRI (print filter data)

Since some of the commands are non printing, this command, which needs no additional data, is needed to display the function in its current form.

8.1.19 RCL (recall)

See *Section 6.1.27*.

8.1.20 RESC (rescale)

If a cascaded realization has been rearranged by the PERM command, or a filter (other than a leapfrog structure, which may *not* be rescaled) has been read in from a file or entered from the keyboard, it can rescaled by this command to optimize it for dynamic range. No parameter values are required and only the comment is printed that the procedure has been performed. The use of this command is illustrated in example 8.4.5.

8.1.21 SAVE (write a permanent disk file)

See *Section 6.1.30*.

8.1.22 STO (temporary store)

See *Section 6.1.34*.

8.1.23 UNDO (undo the previous command)

See *Section 6.1.37*.

8.2 THE ACTIVE ANALYSIS SEGMENT AS STAND-ALONE PROGRAM

In addition to being called automatically from the ACTIVE RC synthesis segment, this program is also available as a stand-alone unit. In the single-executable version it is entered directly from S/FILSYN and can be used to analyze and/or modify any active RC filter function of cascade, leapfrog or follow-the-leader feedback forms. In the multi-executable version, this segment is reached by calling the ACTIVE program and selecting the analysis (A) option.

When entering this segment directly, we may input the filter data either by reading a previously written disk file, or by entering its description directly from the keyboard. The disk read entry method needs only the file name from which the information is read. The filter coefficients are then printed.

The DIR command is acceptable at the FILENAME prompt to obtain a list of available files.

If the filter data is to be entered manually, it may be entered from the terminal either in factored form, or by its (complex) roots i.e., zeros and poles of the transfer functions of the second order blocks. If needed, feedback coefficients will be requested. Since a conversational entry mode is used, very little additional explanation is needed. All data are to be entered in denormalized form and in completely free format. Furthermore, regardless of the filter form, there is no restriction as to the pole Q's of the sections or the locations of their zeros. If a large amount of data is to be entered, the program can be directed to read it from a previously prepared data file.

8.3 DELAY EQUALIZER SUBPROGRAM AS STAND-ALONE UNIT

This subprogram is also available as a stand-alone unit for the equalization of systems described by their natural modes or their measured or tabulated data. The resulting equalizer can then be realized in active RC form.
The subprogram is reached by entering the ACTIVE RC analysis segment from S/FILSYN and subsequently selecting the delay equalizer subprogram at the appropriate prompt. In the multi-executable version, we must call the ACTIVE program and select the analysis (A) option.

Since no filter is yet available, the delay to be equalized must either be entered from the keyboard or read from a previously written data file. The delay may also be calculated from the natural modes of the system, which must also be entered from the keyboard or read from a file. This is done in the usual conversational mode (see *Section 6.1.35*).

8.4 ANALYSIS EXAMPLES

Example 8.4.1 Delay Equalized FLF Bandpass Filter

The bandpass filter originally designed in example 7.6.2 will be used to demonstrate the delay equalization of an active filter. Since we have available a detailed analysis of the passband, we will use these results to perform a delay equalization step. The command and data input is simple, as usual:

```
COMMAND:
>  equ
NO. OF ITERATIONS? (DEFAULT IS 50)
>
ENTER NO.'S OF 2ND AND 1ST ORDER EQUALIZER SECTIONS (I,J)
>  2 0
USE ANALYSIS RESULTS: 1 OR NATURAL MODES: 2 TO CALCULATE DELAY
>  1
ENTER STARTING AND ENDING FREQUENCIES OF APPROXIMATION BAND
>  800 1250
```

We have requested a two section equalizer. The process uses the same least-squares-type iterative optimization as in the other segments. First the summary and iteration history is printed:

```
active bandpass
              *** S/FILSYN ***  DELAY EQUALIZER PROGRAM

LEAST SQUARE ERROR APPROXIMATION -  50 ITERATIONS MAXIMUM
EQUALIZATION FREQUENCY RANGE OF  19 POINTS

    8.000000D+02 HERTZ    TO  1.250000D+03 HERTZ
    5.026548D+03 RAD/SEC  TO  7.853982D+03 RAD/SEC

EQUALIZER SECTION POLES - INITIAL VALUES

                HERTZ                                RAD/SEC
    -2.250000D+02 +J  9.125000D+02       -1.413717D+03 +J  5.733407D+03
    -2.250000D+02 +J  1.137500D+03       -1.413717D+03 +J  7.147123D+03
SYSTEM NORMALIZED FOR OPTIMIZATION BY SCALE FACTOR =   1.000D+03
```

```
ITER NO.    RMS ERROR
  0       1.060904D+00
  1       1.015741D+00
  2       9.941279D-01
  3       9.090353D-01
  4       7.639175D-01
  5       7.223208D-01
  6       6.693233D-01
  7       6.602550D-01
  8       6.600205D-01
  9       6.599995D-01
 10       6.599980D-01
 11       6.599978D-01
```

This is followed by an offer to tabulate the results which contain the filter delay, the equalizer delay, the delay sum and the delay deviation from average -- all versus frequency. The first few lines of this tabulation are shown below:

```
TABULATE RESULTS: Y/N
>  y
  FREQUENCY    ORIG. NET.   EQUALIZER      TOTAL      DEVIATION
    HERTZ         SEC          SEC          SEC          SEC
        3           -3           -3           -3           -3
    X 10         X 10         X 10         X 10         X 10

      .800000     7.406479     1.269939     8.676418     2.212557
      .825000     4.482068     1.586205     6.068273     -.395587
      .850000     3.669580     2.008617     5.678196     -.785664
      .875000     3.436203     2.553855     5.990058     -.473802
      .900000     3.088423     3.191056     6.279480     -.184381
      .925000     2.753414     3.781133     6.534548      .070687
      .950000     2.595022     4.096229     6.691250      .227390
      . . .
```

At the end of the tabulation, we are give the option of plotting the deviation versus frequency. If we decline, we get a list of the natural modes of the resulting equalizer sections:

```
WISH TO SEE DEVIATION PLOT: Y/N
>  n
EQUALIZER SECTION POLES - FINAL VALUES

                HERTZ                                RAD/SEC
    -9.584050D+01 + J 9.475021D+02       -6.021836D+02 + J 5.953331D+03
    -9.665052D+01 + J 1.126211D+03       -6.072731D+02 + J 7.076191D+03
```

Next we must decide whether these results are satisfactory. If they are not, we may either abort the design completely or rerun it with additional or fewer delay equalizer sections. If we like it, we may incorporate the equalizers into the filter, which we elect to do here:

```
INCORPORATE: 1, MODIFY: 2, OPTIMIZE: 3 OR END: 4
>  1
active bandpass

      RESULTS OF THE FLF  SYNTHESIS
     BIQUADRATIC BLOCK COEFFICIENTS
           IN ASCENDING ORDER

   NUMERATOR       DENOMINATOR
```

```
SECTION NO.  1
  0.0000000D+00   4.0449431D+07
  0.0000000D+00   4.0935032D+03
  5.4215904D-01   1.0000000D+00

SECTION NO.  2
  5.9033431D+06   3.3590233D+07   TRANSMISSION ZERO
  0.0000000D+00   0.0000000D+00   3.0000000D+03 HZ
  1.6614825D-02   1.0000000D+00
FEEDBACK COEFFICIENT =   2.4826761D+00

SECTION NO.  3
  1.9513983D+06   2.5101153D+07   TRANSMISSION ZERO
  0.0000000D+00   0.0000000D+00   5.0000000D+02 HZ
  1.9771798D-01   1.0000000D+00
FEEDBACK COEFFICIENT =   3.6985377D+00

SECTION NO.  4
  2.8305104D+07   4.9247279D+07   TRANSMISSION ZERO
  0.0000000D+00   0.0000000D+00   2.0000000D+03 HZ
  1.7924417D-01   1.0000000D+00
FEEDBACK COEFFICIENT =  -5.8514827D+00

SECTION NO.  5
  3.6394259D+07   6.2402856D+07
  0.0000000D+00   0.0000000D+00
  0.0000000D+00   1.0000000D+00
FEEDBACK COEFFICIENT =   1.0984172D+00

SECTION NO.  6
  3.5804777D+07   3.5804777D+07
 -1.2043672D+03   1.2043672D+03
  1.0000000D+00   1.0000000D+00
FEEDBACK COEFFICIENT =   0.0000000D+00

SECTION NO.  7
  5.0441262D+07   5.0441262D+07
 -1.2145462D+03   1.2145462D+03
  1.0000000D+00   1.0000000D+00
FEEDBACK COEFFICIENT =   0.0000000D+00
```

The last two sections i.e., 6 and 7, represent the delay equalizers which are in cascade, hence their feedback coefficients are zero. A brief analysis, shown below, confirms the desired performance of the overall structure:

```
******* COMPUTED PERFORMANCE *******

        FREQUENCY      LOSS        PHASE         DELAY
         IN HZ         IN DB     IN DEGREES    IN SECONDS
       8.00000E+02      .249899  274.112900   8.67642E-03
       8.25000E+02      .180741  339.103800   6.06828E-03
       8.50000E+02      .190231   30.845370   5.67820E-03
       8.75000E+02      .011920   83.259760   5.99007E-03
       9.00000E+02      .058435  138.524400   6.27949E-03
       9.25000E+02      .208183  196.207100   6.53456E-03
       9.50000E+02      .242665  255.858700   6.69125E-03
       9.75000E+02      .137358  315.976700   6.63185E-03
       1.00000E+03      .019231   14.760450   6.41760E-03
       1.02500E+03      .017128   71.473560   6.19597E-03
       1.05000E+03      .130197  126.680500   6.10416E-03
       1.07500E+03      .237370  182.028200   6.23387E-03
       1.10000E+03      .224783  239.417500   6.53227E-03
       1.12500E+03      .096707  299.408100   6.76243E-03
       1.15000E+03      .000486     .129601   6.66363E-03
       1.17500E+03      .088061   58.230090   6.20339E-03
       1.20000E+03      .243469  111.691000   5.72284E-03
```

```
      1.22500E+03      .117157  163.357500   5.96110E-03
      1.25000E+03      .249899  223.369300   7.46593E-03
WISH TO WRITE ANALYSIS DATA ON FILE? (Y/N)
>  n
PLOT - WIDE: W, NARROW: N, GRAPHICS: G OR END: E
>  e
```

Example 8.4.2 Various op-amp implementations -- DES Command

We will now illustrate the specific circuits available from the program for the realization of these sections using the DES command. After selecting the op-amp as the active element, let us request the design of the first section using a 1 nF capacitor value:

```
COMMAND:
>  des
ACTIVE COMPONENT - OP-AMP: 1 OR OTA: 2
>  1
ENTER SECTION NUMBER
>  1
ENTER CAPACITANCE VALUE
>  1e-9

SECTION NO.  1

     |        |
     |        C            1.00000 nF
     |---C----+------|    820.00000 pF
     |        C      |     1.00000 nF
     |---R----+      |    378.51460 kohm
     | ,-,    |      R     35.88671 kohm
     | | -----        |
     | | \- +/        |
     | |  \ /         |
     | |   V          |
     | '------+-------'
     |        |
```

Since the section Q is low (1.55), we obtained a single op-amp realization with quite reasonable component values. If we need lower resistor values, a higher C must be specified. The Q value may be calculated from the denominator coefficients using the formula:

$$Q = B_2^{1/2}/B_1$$

Let us now consider the design of the second section. Note that the active element need not be specified again and that the '+' symbol on the schematic indicates no electrical connection where the lines cross.

```
COMMAND:
> des 2 21nF
SECTION NO.  2
     |        |
     | ,------'
     | |
     | |      ,-------,
     | |      R       |      8.20000 kohm
     | |---R--+-,     |     46.65829 kohm
     |-+-,    | |     |
     | | -----  |     |
     | | \+ -/ C      |     21.00000 nF
     | |  \ /   |     |
     | |   V    |     |
     | |   '----'     |
     | |      |       |
     | |      R       |      8.23255 kohm
     | |---R--+-,-,   |    *** OPEN ***
     |-+-,    | | |   |
     | | ----- C |    |     21.00000 nF
     | | \+ -/ | |    |
     | |  \ /  | R    |    *** OPEN ***
     | |   V   | |    |
     | |   '---'-'    |
     | |      |       |
```

```
     | |      R      |        8.20000 kohm
     | └R──+┐        |      493.53520 kohm
     |     | |        |
     ├──┐  | |        |
     |   -----        |
     |   \+ -/ R      |        8.20000 kohm
     |    \ /   |     |
     |     V    |     |
     |          └─────┘
     |
SECTION PROVIDES 180 DEGREES ADDITIONAL PHASE
ADD FEEDBACK PATH FROM HERE TO INPUT OF SECTION  1
```

Since this is a high, in fact, infinite Q section (the B_1 coefficient is zero), we only get the three op-amp version. The two op-amp version can be used for high-Q circuits, but *not* for infinite Q. As the printout indicates, a feedback path must be added from the output of this section back to the input of section 1. The user must perform this step. Now if we design the last filter section (Section No. 5), we get to choose between the two op-amp and the three op-amp circuit. When we select the two op-amp version, we get:

```
COMMAND:
>  des 5 10nF
SECTION NO.  5
HIGH-Q SECTION. TWO: 2 OR THREE: 3 OP-AMP VERSION
>  2

     |        |
     |  ┌─────┘
     |  |
     |  |    ┌──┬─┐┐       *** OPEN ***
     |  |    |   R | |       12.00000 kohm
     |  |   R   | | |       12.00000 kohm
     |  |    |   C | |       10.00000 nF
     ├─+─R─┤    | | |       12.00000 kohm
     |  |    |   ├─┤ |
     |  |   -----   | |
     |  |   \+ -/   | |
     |  |    \ /    | |
     |  |     V     | |
     |  |    ┌─┴─┐   | |
     |  |   C   |   | |       10.00000 nF
     |  |    |   R | |       12.00000 kohm
     |  └─R─┤   ├─┘ |       13.35409 kohm
     |      -----    |
     |      \+ -/    |
     |       \ /     |
     |        V      |
     |        ├──────┘
     |        |
SECTION PROVIDES EXTRA MULTIPLIER =  3.42927E+00
ADD FEEDBACK PATH FROM HERE TO INPUT OF SECTION
```

The two op-amp version is using differential-input op-amp's, while the three op-amp circuit only has single ended input amplifiers, which makes the insertion of additional feedback paths much simpler. Otherwise we may need additional summing stages to implement the feedback paths.

Let us now examine the specific circuits available for a delay equalizer section by requesting the design of the 6th section of the filter:

```
COMMAND:
> des 1 6 1e-9
SECTION NO.  6
```

```
|        |
|        |
|    ┌───┴──┐
|    C   |  |          1.00000 nF
|    |   R  |        408.32330 kohm
├─R─┬┤   |  |        588.44450 kohm
|  | |   |  R         10.00000 kohm
|  | C   |  |          1.00000 nF
|  | └───┘  |
|  |        |
|  |    ┌───┴┐
|  R   ----- |        77.39622 kohm
|  |   \+ -/ |
|  |    \ /  R         4.17406 kohm
|  |     V   |
|  └────┬────┘
|       |
```

Since this is a medium Q section (Q = 4.97), we obtain another single op-amp circuit, which looks quite reasonable and uses a differential input op-amp.

Example 8.4.3 Switched-Capacitor Filter -- DEL, BZT and DES Commands

Next we illustrate the BZT (bilinear Z-transform) command to show how we can design a multiple-feedback (leapfrog or FLF) type switched capacitor filter. We first delete the delay equalizer sections that were added in example 8.4.1 and then invoke the BZT command with the following results:

```
COMMAND:
> del 7
** DONE **

COMMAND:
> del 6
** DONE **

COMMAND:
>  bzt
ENTER SAMPLING FREQUENCY
>  1.e5
```

Only the sampling frequency is needed which we could have entered with the command on the same line in free format. The results follow immediately:

```
FOLLOWING FILTER IS OF SAMPLED DATA TYPE
NYQUIST RATE =  5.0000000D+04 HZ.
active bandpass
      RESULTS OF THE FLF  SYNTHESIS
     BIQUADRATIC BLOCK COEFFICIENTS
           IN ASCENDING ORDER

    NUMERATOR       DENOMINATOR
SECTION NO.  1
  5.3075299D-01   1.0000000D+00
 -1.0615060D+00  -1.9559416D+00
  5.3075299D-01   9.5990556D-01
SECTION NO.  2
  1.6748482D-02   1.0000000D+00
 -3.2906518D-02  -1.9966403D+00
  1.6748482D-02   1.0000000D+00
FEEDBACK COEFFICIENT =   2.4826761D+00

SECTION NO.  3
  1.9764266D-01   1.0000000D+00
```

```
 -3.9509011D-01  -1.9974889D+00
  1.9764266D-01   1.0000000D+00
FEEDBACK COEFFICIENT =   3.6985377D+00

SECTION NO.  4
  1.7973101D-01   1.0000000D+00
 -3.5663209D-01  -1.9950763D+00
  1.7973101D-01   1.0000000D+00
FEEDBACK COEFFICIENT =  -5.8514827D+00

SECTION NO.  5
  9.0937256D-04   1.0000000D+00
  1.8187451D-03  -1.9937630D+00
  9.0937256D-04   1.0000000D+00
FEEDBACK COEFFICIENT =   1.0984172D+00
```

The frequency analysis results, shown below, show a slight shift of the lower passband edge (warping) when compared with those obtained from example 8.4.1:

```
******* COMPUTED PERFORMANCE *******

        FREQUENCY      LOSS        PHASE         DELAY
         IN HZ         IN DB     IN DEGREES    IN SECONDS

       7.00000E+02    26.959920   59.943020   1.02668E-03
       7.50000E+02    13.704970   88.574390   2.55510E-03
       8.00000E+02      .265905  186.452100   7.43383E-03
       8.50000E+02      .192061  274.652100   3.67312E-03
       9.00000E+02      .057154  336.136900   3.09273E-03
       9.50000E+02      .243057   26.304470   2.59655E-03
       1.00000E+03      .019779   73.111780   2.63178E-03
       1.05000E+03      .129342  119.784600   2.51206E-03
       1.10000E+03      .225211  164.276600   2.51166E-03
       1.15000E+03      .000545  213.128800   2.93931E-03
       1.20000E+03      .243340  268.353700   3.21399E-03
       1.25000E+03      .249899  344.144800   5.90999E-03
       1.30000E+03    10.069680   70.380450   2.67180E-03
       1.35000E+03    20.753950  100.532800   1.07076E-03
```

A few comments are necessary for switched-capacitor filters. The first and most important is that the BZT command performs the bilinear Z-transformation. Therefore the prewarping must be done by us. This can be done several different ways. The most general is to use the SMAIN (root) segment to perform the design in an automatic prewarping mode (i.e. using the DIGITAL option from the start). Make note of the prewarped frequencies and then repeat the design using these prewarped data in analog (*lumped*) mode. The method works for both cascade or feedback realizations. The problem is that if delay equalization is needed, it must be done *before* using the BZT command, and hence will not be exactly right. For better alternatives, see *Application Note 9*. We will demonstrate the DES command when applied to switched-capacitor filters:

```
COMMAND:
> des
WISH TO WRITE "SCASY" FILE: 1, "SWITCAP" FILE: 2 OR NO FILE: 0
> 1
ENTER FILE NAME
> test  .

active bandpass

SECTION NO.  1   OUTPUT = OUT1
CA =  92.81520   CB =  92.81520   CC =   1.00000   CD =  61.98286
CE =  12.39657   CF =  -1.00000   CG =  14.88684   CH =  12.39657
```

```
CI = 247.11930   CJ = 249.60960   CK =  74.25216
SECTION NO.  2   OUTPUT = OUT2
CA =  29.50178   CB =  29.50178   CC =   3.27131   CD = 836.84190
CE =    .00000   CF =    .00000   CG =   1.00000   CH =    .00000
CI =   1.00000   CJ =   1.00000   CK =    .00000
FEEDBACK TO PREVIOUS SECTION:  CGG =  14.75836   CHH =  12.28958
  CII = 244.98660   CJJ = 247.45540

SECTION NO.  3   OUTPUT = OUT1
CA =  26.71114   CB =  26.71114   CC =   4.97194   CD =  98.59023
CE =  78.87218   CF =   1.00000   CG =   1.00000   CH =    .00000
CI =   1.95401   CJ =   1.72585   CK =  26.30305
FEEDBACK TO PREVIOUS SECTION:  CGG =   1.38630   CHH =    .00000
  CII =   1.38630   CJJ =   1.38630

SECTION NO.  4   OUTPUT = OUT2
CA =   6.71161   CB =   6.71161   CC =   1.83773   CD = 426.25580
CE =    .00000   CF =    .00000   CG =   1.00000   CH =    .00000
CI =   1.00000   CJ =   1.00000   CK =    .00000
FEEDBACK TO PREVIOUS SECTION:  CGG =    .83785   CHH =    .00000
  CII =   1.63717   CJJ =   1.44600

SECTION NO.  5   OUTPUT = OUT2
CA =1788.47100   CB =1788.47100   CC =   2.04259   CD = 447.11770
CE =    .00000   CF =  35.97661   CG =   1.00000   CH =    .00000
CI =   1.00000   CJ =   1.00000   CK =    .00000
FEEDBACK TO PREVIOUS SECTION:  CGG =    .49975   CHH =    .00000
  CII =    .49975   CJJ =    .49975
```

As we can see, for switched capacitor filters, the DES command yields a complete design. If we desire, the finished design may be written to a file for transmission into the SCASY switched-capacitor analysis program, or to the SWITCAP program, available from Columbia University, New York, N.Y. The circuits used here are shown in Figs. 8.1 and 8.2 below, while the data file describing this circuit to the SCASY program is as follows:

```
C>type test.swc

active bandpass
 2,1,1
            200000.0
 END
 CA01     92.81520  0  4  3  0
 CB01     92.81520  4  5  4  5
 CC01      1.00000  2  5  0  0
 CD01     61.98286  2  3  2  3
 CE01     12.39657  2  5  2  5
 CF01     -1.00000  4  5  0  0
 CG01     14.88684  1  2  0  0
 CH01     12.39657  0  2  1  0
 CI01    247.11930  1  4  0  0
 CJ01    249.60960  0  4  1  0
 CK01     74.25216  3  4  0  0
 A101   1000.00000  3  0  0  2
 A201   1000.00000  5  0  0  4
 CA02     29.50178  0  8  7  0
 CB02     29.50178  8  9  8  9
 CC02      3.27131  6  9  0  0
 CD02    836.84190  6  7  6  7
 CG02      1.00000  3  6  0  0
 CI02      1.00000  3  8  0  0
 CJ02      1.00000  0  8  3  0
 A102   1000.00000  7  0  0  6
 A202   1000.00000  9  0  0  8
 CL02     14.75836  9  2  0  0
 CM02     12.28958  0  2  9  0
```

```
CN02    244.98660  9  4  0  0
CP02    247.45540  0  4  9  0
CA03     26.71114  0 12 11  0
CB03     26.71114 12 13 12 13
CC03      4.97194 10 13  0  0
CD03     98.59023 10 11 10 11
CE03     78.87218 10 13 10 13
CF03      1.00000 12 13  0  0
CG03      1.00000  9 10  0  0
CI03      1.95401  9 12  0  0
CJ03      1.72585  0 12  9  0
CK03     26.30305 11 12  0  0
A103   1000.00000 11  0  0 10
A203   1000.00000 13  0  0 12
CL03      1.38630 11  6  0  0
CN03      1.38630 11  8  0  0
CP03      1.38630  0  8 11  0
CA04      6.71161  0 16 15  0
CB04      6.71161 16 17 16 17
CC04      1.83773 14 17  0  0
CD04    426.25580 14 15 14 15
CG04      1.00000 11 14  0  0
CI04      1.00000 11 16  0  0
CJ04      1.00000  0 16 11  0
A104   1000.00000 15  0  0 14
A204   1000.00000 17  0  0 16
CL04       .83785 17 10  0  0
CN04      1.63717 17 12  0  0
CP04      1.44600  0 12 17  0
CA05   1788.47100  0 20 19  0
CB05   1788.47100 20 21 20 21
CC05      2.04259 18 21  0  0
CD05    447.11770 18 19 18 19
CF05     35.97661 20 21  0  0
CG05      1.00000 17 18  0  0
CI05      1.00000 17 20  0  0
CJ05      1.00000  0 20 17  0
A105   1000.00000 19  0  0 18
A205   1000.00000 21  0  0 20
CL05       .49975 21 14  0  0
CN05       .49975 21 16  0  0
CP05       .49975  0 16 21  0
IN  1.0  1
OUT     21
END
```

Concerning the structure of this file, we refer to the SCASY program manual.

The switched capacitor design procedure requires a few comments. If the overall filter degree is odd, the first order section should be the last one in both the cascade structure and in the leapfrog structure. In the leapfrog case, this section may appear as either the first or the last one, but experimental results show that the latter is preferable. In the cascade case this section may appear anywhere, but the last position was again found to be preferable. In the follow-the-leader case, this section *must* appear as the first one.

In leapfrog- and follow-the-leader feedback cases, the program selects one of the four possible structures described by Fleischer and Laker (called E, E', F and F' in the article). However, in the cascade implementation, we have a choice and will be given the option of specifying one of the four configurations for each of the sections. Some of these may have substantially smaller spread of capacitance values than others. We may also let the program make the selection, if desired.

Note that in all implementations, only the output stage of each second-order section is scaled for optimal dynamic range. The other stage will usually have a low signal level and should be scaled up for both better dynamic range and better overall performance. This rescaling also affects the largest capacitances in the circuit and will improve (reduce the range of) the capacitance values. Therefore the design should be analyzed and its dynamic range optimized, before accepting or rejecting it. Details of this procedure may be found in the SCASY manual. Finally note that the feedback paths are correctly implemented in these circuits and they are also correctly represented in the SCASY and SWITCAP files.

Because the switched-capacitor circuits are obtained by applying the bilinear Z-transform to an active-RC transfer function, there is no "prewarping" done (see *Section 9*). This is acceptable as long as the sampling frequency is much higher than the filter passband, because the "warping" can be neglected. A large percentage of switched-capacitor filters in use satisfy this condition. If how- ever, the sampling frequency is comparable to the filter passband, we can avoid the effects of warping altogether using the DIGITAL segment of the program, i.e. designing the filter as if it were an IIR digital filter.

The only problem with this approach is the necessity to transfer the resulting digital filter transfer function into this ACTIVE ANALYSIS segment to complete the design and obtain the component values. This was previously an awkward step, but a new command in the DIGITAL segment and a new script file (in the personal computer version) simplifies it considerably.

The procedure to be used is as follows:

A. Design the filter as an IIR digital filter from the beginning, all the way to the delay equalization (if desired).

B. Wen the design is completed, use the new **SWC** command in the digital segment to write the filter transfer function data into a disk file.

C. Exit the DIGITAL segment of the program, and use the SWC.BAT script file to transfer the data to the ACTIVE ANALYSIS segment, by issuing the DOS command:

SWC FNAME [Enter}

where FNAME is the name of the file containing the digital transfer function data. When this script file stops, we are in the ACTIVE segment, with the filter data entered and ready for the final step, i.e. finding an implementation for the filter.

Naturally, if the script file capability is not available, we can perform its function manually and *Application Note 9* describes the procedure in detail.

Example 8.4.4 Cascade Bandpass -- PERM, RESC, PRI and DES Commands

The first step in this example illustrates the PERM (permutation) command. As input, we will use the results of example 7.6.3, the cascade realization of the filter. Originally the program

selects its own sequence of factors for both numerators and denominators. We may now change this by permuting them as follows:

```
COMMAND:
>  perm
NUMERATOR: N OR DENOMINATOR: D
>  d
ENTER  5 PERMUTED SERIAL NUMBERS
>  1 3 4 2 5
** DONE **
COMMAND:
>  resc
** DONE **
```

If desired, the numerator factors could also have been rearranged. After such a rearrangement, it is advisable to rescale the resulting circuit, as we have done. Note also that linear (first order) numerator and denominator terms must be kept together.

All of the above commands are non printing; we use the print (PRI) command to see the results:

```
COMMAND:
> pri
active bandpass
      RESULTS OF THE CASC SYNTHESIS
     BIQUADRATIC BLOCK COEFFICIENTS
           IN ASCENDING ORDER
    NUMERATOR       DENOMINATOR
SECTION NO.  1
  0.0000000D+00   4.0720077D+07
  1.2796075D+03   1.2793949D+03
  0.0000000D+00   1.0000000D+00

SECTION NO.  2
  0.0000000D+00   5.3843721D+07
  1.7121484D+03   1.0651663D+03
  0.0000000D+00   1.0000000D+00
SECTION NO.  3
  1.5601416D+07   2.4811041D+07   TRANSMISSION ZERO
  0.0000000D+00   3.1518107D+02   3.0000000D+03 HZ
  4.3909832D-02   1.0000000D+00

SECTION NO.  4
  7.8648370D+06   2.9955063D+07   TRANSMISSION ZERO
  0.0000000D+00   9.2588566D+02   2.0000000D+03 HZ
  4.9804662D-02   1.0000000D+00

SECTION NO.  5
  2.3301878D+07   6.2624100D+07   TRANSMISSION ZERO
  0.0000000D+00   3.9993506D+02   5.0000000D+02 HZ
  2.3609739D+00   1.0000000D+00
```

An analysis (not shown) confirms that the behavior of this filter is identical to example 7.6.3.

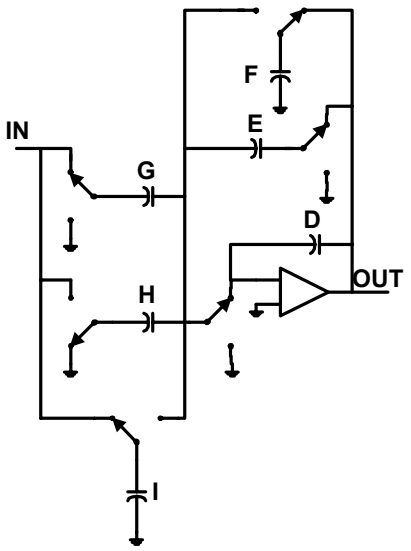

Fig. 8.1 First order switched-capacitor section.

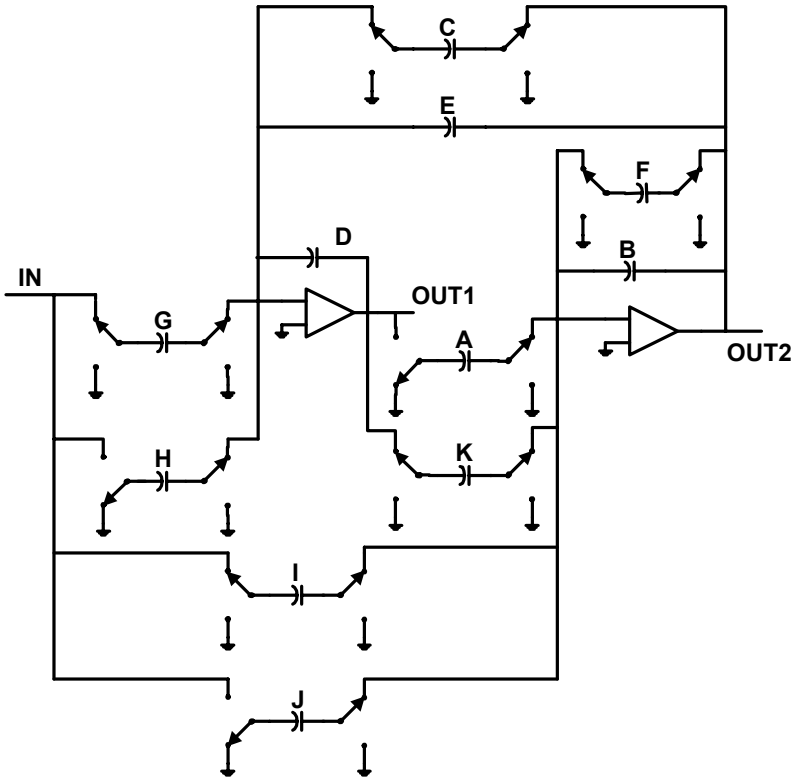

Fig. 8.2 Second order switched-capacitor section.

The program has a library of more than two dozen configurations available for the design stage. Beyond the options offered and forcing the program to consider low-, medium- or high-Q sec-

tions, we cannot access this library directly. This is because very few of the sections can realize an unrestricted transfer function. The program must therefore select the circuit(s) which *can* imple- ment the indicated first- or second-order function. To illustrate one of the medium-Q circuits available from the program, we request the design of the fifth section of this filter (Q = 5).

```
COMMAND:
>  des 5 10n
SECTION NO.  5
CIRCUIT - TWIN-T: 1 OR NOT: 2
>  1
     |        |
     |        |
     |       ┌┴┐
     |       │ C          10.00000 nF
     |      R │           31.83099 kohm
     |       │ ├R┐        10.61033 kohm
     |       ├─+─C┤       10.00000 nF
     |       │ C  │       10.00000 nF
     |      R │   │       63.66198 kohm
     |       └┬┘  │
     |────C────┤  │        5.00000 nF
     |────R────┤  │        8.16857 kohm
     |─R──┐    │  │        6.65230 kohm
     |    │ -----  |
     |    │ \- +/  |
     |   R  \ /    |       15.03240 kohm
     |    |   V    |
     |    └────┬───┘
     |         |
     |         |
SECTION PROVIDES EXTRA MULTIPLIER =  6.90336E-01
```

For section four there are two circuits available again. We show both here:

```
SECTION NO. 4
     |        |
     |       ┌┴┐
     |       │ R          66.93214 kohm
     |──+──R──┤            7.32447 kohm
     |       ├─C┐         10.00000 nF
     |       │ C │        10.00000 nF
     |──+──R──┤  │        14.20483 kohm
     |   R    │  │        40.15688 kohm
     |   ├┐   ├─R┤        29.53680 kohm
     |─R─┤ -----  |        2.10483 kohm
     |   │ \+ -/  |
     |   R  \ /    |       10.00000 kohm
     |    |   V    |
     |    └────┬───┘
     |         |
     |         |
```

and the alternative:

```
SECTION NO.  4
    |        |
    |       ┌┴┐
    |       │ C          1.00000 nF
    |      R │          79.57747 kohm
    |       │ ├─R─┐      26.52582 kohm
    |       ├─+─C─┤       1.00000 nF
    |       │ C   │       1.00000 nF
    |      R │   │     159.15500 kohm
    |       └─┬─┘
    ├──────C──┤   │       2.84779 nF
    ├──────R──┤   │     883.85870 kohm
    ├─R──┐    │   │       6.97151 kohm
    |    | -----  |
    |    | \- +/  |
    |   R  \ /    |      14.34409 kohm
    |    |   V    |
    |    └────┬───┘
    |         |
    |         |
SECTION PROVIDES EXTRA MULTIPLIER =  9.16879E+00
```

For the twin-T case the circuit can realize the transfer function to within a multiplier of 9.17, which contributes additional gain. The other implementation does not require a multiplier. In a cascade implementation a multiplier does not make much difference, but if we have feedback around the blocks, the amount of feedback must be adjusted accordingly.

Example 8.4.5 Cascade Bandpass -- MULT Command

The program is able to make this adjustment if we take these multipliers into account by specifically including them. This is done by using the MULT command, for instance, for section five above:

```
COMMAND:
> mult
ENTER SECTION NUMBER
> 5
ENTER MULTIPLIER
> .690336
** DONE **
```

Repeating the design:

```
COMMAND:
>  des 5 10n
SECTION NO.  5
CIRCUIT - TWIN-T: 1 OR NOT: 2
>  1
```

```
|        |
|        |
|       ┌┴┐
|       |  C          10.00000 nF
|      R  |           31.83099 kohm
|       |  ├R┐        10.61033 kohm
|       ├──+─C─┤       10.00000 nF
|       |  C   |       10.00000 nF
|      R  |    |       63.66198 kohm
|       └──┤    |
|──────C───┤    |        5.00000 nF
|──────R───┤    |        8.16857 kohm
├R──┐       |    |        6.65230 kohm
|   | -----     |
|   | \- +/     |
|  R  \ /       |       15.03240 kohm
|   |   V       |
|   └─────┬─────┘
|         |
|         |
```

The circuit is unchanged, but the *extra* multiplier is not printed any more. The circuit implements the biquadratic block without any extra gain over and above that indicated by its transfer function. If there had been feedback around the block, it would have been properly adjusted. If we wish to maintain the dynamic range of the circuit, we could introduce the inverse factor into the suc- ceeding or preceeding block.

Example 8.4.6 Stand-Alone Analysis -- SAVE Command, direct data input

To demonstrate how this segment can be used independently, we will repeat the design of the all-pole bandpass, example 7.6.4. We will assume that we have stored the design information of that example on a file with the name “test”, using the following procedure:

```
COMMAND:
> save
ENTER FILE NAME
> test
** DONE **
COMMAND:
> end
```

Leaving the active segment and going back to the beginning of the program (or the beginning of the ACTIVE program in the multi-executable version), we may enter the ACTIVE ANALYSIS segment directly and read this data back using the following conversational sequence:

```
C:>active
         ***** S/FILSYN *****
    RELEASE 3.2  VERSION 1  4/1/94

         ** ACTIVE SEGMENT **

Copyright (C) 1983 - 1995 Dr. George Szentirmai
            All Rights Reserved.

SYNTHESIS: S, ANALYSIS: A OR END: E
> a
READ DATA FROM FILE? ENTER FILE NAME OR: N
> test
```

This is followed immediately by the usual printout which shows us what we have recalled:

```
active bandpass
   RESULTS OF THE CASC SYNTHESIS
```

```
     BIQUADRATIC BLOCK COEFFICIENTS
           IN ASCENDING ORDER
    NUMERATOR       DENOMINATOR

SECTION NO.  1
  0.0000000D+00   4.0720077D+07
  1.2794046D+03   1.2793949D+03
  0.0000000D+00   1.0000000D+00

SECTION NO.  2
  0.0000000D+00   2.9955063D+07
  1.5480545D+03   9.2588566D+02
  0.0000000D+00   1.0000000D+00

SECTION NO.  3
  2.0685198D+07   5.3843721D+07
  0.0000000D+00   1.0651663D+03
  5.8218021D-02   1.0000000D+00

SECTION NO.  4
  6.5617255D+06   2.4811041D+07
  0.0000000D+00   3.1518107D+02
  4.1552612D-02   1.0000000D+00

SECTION NO.  5
  2.3301943D+07   6.2624100D+07
  0.0000000D+00   3.9993506D+02
  2.3609805D+00   1.0000000D+00
```

We may now perform any of the operations permitted in this segment.

To show *direct* data entry, we again leave this segment and reenter the leapfrog realization of this filter manually from the keyboard. The resulting conversational data input sequence in the personal computer (multi-executable) version is shown below.

```
C:>active
         ***** S/FILSYN *****
    RELEASE 3.2  VERSION 1   4/1/94

         ** ACTIVE SEGMENT **

Copyright (C) 1983 - 1995 Dr. George Szentirmai
            All Rights Reserved.

SYNTHESIS: S, ANALYSIS: A OR END: E
>  a
READ DATA FROM FILE? ENTER FILE NAME OR: N
>  n
ENTER TITLE. IF END, ENTER: END
>  active bandpass
DELAY EQUALIZER DESIGN: Y/N
>  n ! This is the entry point to the delay equalizer
FILTER TYPE - LOWPASS: 1, HIGHPASS: 2, BANDPASS: 4 OR BAND-REJECT: 5
>  4
ENTER (UPPER) PASSBAND EDGE FREQUENCY IN HZ
>  2000
ENTER SAMPLING RATE IN HZ. ANALOG FILTER, ENTER 0.
>  0
IS TRANSFER FUNCTION GIVEN BY ROOTS: R OR IN FACTORED FORM: F
>  f
NOTE THAT THESE MUST BE PROPERLY DIMENSIONED!
HOW MANY NUMERATOR FACTORS
>  3
ENTER  3 CONSTANT COEFFICIENTS
```

```
> 0 0 0
ENTER  3 LINEAR COEFFICIENTS
> 6269.9521 4045.1377 6999.6294
ENTER  3 QUADRATIC COEFFICIENTS
> 0 0 0
HOW MANY DENOMINATOR FACTORS
>  3
ENTER  3 CONSTANT COEFFICIENTS
>  7.8956835e7 7.8956835e7 7.8956835e7
ENTER  3 LINEAR COEFFICIENTS
>  3.9361422e3 0 3.9361422e3
ENTER  3 QUADRATIC COEFFICIENTS
>  1. 1. 1.
CASCADE: 1, FLF: 2 OR LEAPFROG: 3
>  3
ENTER  2 FEEDBACK COEFFICIENTS
>  -.89067674 -.79506905
```

We can enter either roots or quadratic factors. We used the latter since that was the data we had available. Instead of entering the coefficients from the keyboard, we could have asked the program to read them from a previously prepared file. Note that the delay equalization subprogram is accessible through this path as well.

There are minor differences between the single-executable and multi-executable versions of the program. The beginning of the single-executable direct data entry form is as follows:

```
vax2 $ run sfilsyn
         ***** S/FILSYN *****
   RELEASE 3.2  VERSION 1   4/1/94

Copyright (C) 1983 - 1995 Dr. George Szentirmai
             All Rights Reserved.

READ DATA FROM FILE: Y/N
> n
PLACER: P, SMAIN: S, LADDER: L, DIGITAL: D, ACTIVE: A OR END: E
> a      ! This is the active analysis entry point.
READ DATA FROM FILE? ENTER FILE NAME OR: N
> n      ! From here on, the procedure is the same.
ENTER TITLE. IF END, ENTER: END
> direct input active filter
DELAY EQUALIZER DESIGN: Y/N
> n      ! This is the entry point to the delay equalizer.
 . . .
```

From here on the two versions behave identically. After completing the data input we automatically obtain a print to verify that it had been entered correctly:

```
active bandpass
     RESULTS OF THE LEAP SYNTHESIS
     BIQUADRATIC BLOCK COEFFICIENTS
           IN ASCENDING ORDER

    NUMERATOR       DENOMINATOR
SECTION NO.  1
  0.0000000D+00   7.8956835D+07
  6.2699521D+03   3.9361422D+03
  0.0000000D+00   1.0000000D+00

SECTION NO.  2
  0.0000000D+00   7.8956835D+07
  4.0451377D+03   0.0000000D+00
  0.0000000D+00   1.0000000D+00
```

```
 FEEDBACK COEFFICIENT =  -8.9067674D-01
 SECTION NO.  3
   0.0000000D+00   7.8956835D+07
   6.9996294D+03   3.9361422D+03
   0.0000000D+00   1.0000000D+00
 FEEDBACK COEFFICIENT =  -7.9506905D-01
```

As a further illustration, we will now delay equalize this filter:

```
COMMAND:
>  equ
NO. OF ITERATIONS? (DEFAULT IS 50)
>
ENTER NO.'S OF 2ND AND 1ST ORDER EQUALIZER SECTIONS (I,J)
>  2 0
NO ANALYSIS RESULTS ARE AVAILABLE
COMMAND:
>  freq
ENTER FREQ:
>  1000 2000 50
ENTER FREQ:
>
TABULATE: Y/N
>  y
```

Since no previous analysis was done and the natural modes are not available, we cannot proceed until such an analysis *is* done. The results of a frequency domain analysis are:

```
active bandpass

           ******* COMPUTED PERFORMANCE *******

        FREQUENCY      LOSS        PHASE         DELAY
          IN HZ        IN DB     IN DEGREES    IN SECONDS
       1.00000D+03      .499885  224.875816   1.76743E-03
       1.05000D+03      .002212  253.801569   1.40146E-03
       1.10000D+03      .233392  275.421289   1.02823E-03
       1.15000D+03      .453140  291.866802   8.23996E-04
       1.20000D+03      .493744  305.771420   7.34799E-04
       1.25000D+03      .390730  318.675671   7.05657E-04
       1.30000D+03      .225554  331.325414   7.01935E-04
       1.35000D+03      .077872  343.959865   7.00919E-04
       1.40000D+03      .003769  356.490441   6.88891E-04
       1.45000D+03      .023338    8.667603   6.61772E-04
       1.50000D+03      .121028   20.249442   6.23995E-04
       1.55000D+03      .258408   31.119874   5.84278E-04
       1.60000D+03      .390730   41.324330   5.51294E-04
       1.65000D+03      .479103   51.047313   5.31720E-04
       1.70000D+03      .496703   60.576293   5.30458E-04
       1.75000D+03      .432225   70.277952   5.51541E-04
       1.80000D+03      .294887   80.586515   5.98350E-04
       1.85000D+03      .124437   91.979134   6.71662E-04
       1.90000D+03      .006102  104.881729   7.63589E-04
       1.95000D+03      .078196  119.429682   8.48381E-04
       2.00000D+03      .499885  135.124185   8.83718E-04
```

We can now request the delay equalization again:

```
COMMAND:
>  equ
NO. OF ITERATIONS? (DEFAULT IS 50)
>
ENTER NO.'S OF 2ND AND 1ST ORDER EQUALIZER SECTIONS (I,J)
>  2 0
```

```
ENTER STARTING AND ENDING FREQUENCIES OF APPROXIMATION BAND
>  1000 2000
```

The program proceeded with the equalization with the following results:

```
                *** S/FILSYN ***  DELAY EQUALIZER PROGRAM

 LEAST SQUARE ERROR APPROXIMATION -  50 ITERATIONS MAXIMUM
 EQUALIZATION FREQUENCY RANGE OF  21 POINTS

     1.000000D+03 HERTZ    TO  2.000000D+03 HERTZ
     6.283185D+03 RAD/SEC  TO  1.256637D+04 RAD/SEC
 EQUALIZER SECTION POLES - INITIAL VALUES

                HERTZ                                RAD/SEC
     -5.000000D+02 +J  1.250000D+03       -3.141593D+03 +J  7.853982D+03
     -5.000000D+02 +J  1.750000D+03       -3.141593D+03 +J  1.099557D+04
 SYSTEM NORMALIZED FOR OPTIMIZATION BY SCALE FACTOR =   1.000D+03

 ITER NO.    RMS ERROR
   0       2.305322D-01
   1       1.926167D-01
   2       1.721217D-01
   3       1.444874D-01
   4       1.296876D-01
   5       1.260038D-01
   6       1.259117D-01
   7       1.259090D-01
   8       1.259088D-01
   9       1.259088D-01
```

The optimization converged in 9 iterations and yielded an equalized delay with a ripple of about 0.6 msec. The first few lines of the optimization tabulation are:

```
 TABULATE RESULTS: Y/N
 >  y
   FREQUENCY    ORIG. NET.   EQUALIZER      TOTAL      DEVIATION
     HERTZ         SEC          SEC          SEC          SEC
          3          -3           -3           -3           -3
    X 10         X 10         X 10         X 10         X 10

    1.000000     1.767434      .627764     2.395198      .403491
    1.050000     1.401458      .726629     2.128088      .136381
    1.100000     1.028226      .842122     1.870349     -.121358
    1.150000      .823996      .971645     1.795642     -.196065
    1.200000      .734799     1.107121     1.841920     -.149787
    1.250000      .705657     1.233556     1.939214     -.052493
    1.300000      .701935     1.331627     2.033562      .041856
    1.350000      .700919     1.386226     2.087145      .095439
    1.400000      .688891     1.396427     2.085318      .093612
    1.450000      .661772     1.377443     2.039215      .047509
    1.500000      .623995     1.352257     1.976251     -.015455
    1.550000      .584278     1.340869     1.925147     -.066559
   . . .
```

After tabulating the results we are provided with the final equalizer data:

```
WISH TO SEE DEVIATION PLOT: Y/N
>  n
EQUALIZER SECTION POLES - FINAL VALUES

                HERTZ                                RAD/SEC
    -3.029613D+02 + J 1.333943D+03       -1.903562D+03 + J 8.381408D+03
    -2.840052D+02 + J 1.802968D+03       -1.784457D+03 + J 1.132838D+04
```

```
INCORPORATE: 1, MODIFY: 2, OPTIMIZE: 3 OR END: 4
> 1
```

At this stage we are given the usual options:

- abort the equalization step (4)
- perform more optimization (3)
- modify the number of sections used (2) or
- incorporate the equalizer into the filter (1).

Selecting option 1 we obtain the following printout, which contains the filter and the delay equalizer:

```
active bandpass
      RESULTS OF THE LEAP SYNTHESIS
     BIQUADRATIC BLOCK COEFFICIENTS
           IN ASCENDING ORDER

    NUMERATOR       DENOMINATOR
SECTION NO.  1
  0.0000000D+00   7.8956835D+07
  6.2699521D+03   3.9361422D+03
  0.0000000D+00   1.0000000D+00

SECTION NO.  2
  0.0000000D+00   7.8956835D+07
  4.0451377D+03   0.0000000D+00
  0.0000000D+00   1.0000000D+00
FEEDBACK COEFFICIENT =  -8.9067674D-01

SECTION NO.  3
  0.0000000D+00   7.8956835D+07
  6.9996294D+03   3.9361422D+03
  0.0000000D+00   1.0000000D+00
FEEDBACK COEFFICIENT =  -7.9506905D-01

SECTION NO.  4
  7.3871553D+07   7.3871553D+07
 -3.8071236D+03   3.8071236D+03
  1.0000000D+00   1.0000000D+00
FEEDBACK COEFFICIENT =   0.0000000D+00
SECTION NO.  5
  1.3151646D+08   1.3151646D+08
 -3.5689147D+03   3.5689147D+03
  1.0000000D+00   1.0000000D+00
FEEDBACK COEFFICIENT =   0.0000000D+00
```

Next we attempt to use the PERM (permutation) command. Since the filter is a leapfrog structure which cannot be permuted, the program will not accept the command and so advises us:

```
COMMAND:
> perm
NO PERMUTATION POSSIBLE
```

Finally, to illustrate the DEL (delete) command, let us assume that we changed our mind and do not want to include the delay equalizer after all. Deleting the last two sections easily remedies the situation:

```
COMMAND:
> del
ENTER SECTION NUMBER
> 5
** DONE **

COMMAND:
> del 4
** DONE **

COMMAND:
> pri
```

Since this is a non printing command, we should be careful to delete section 5 first. If we delete section 4 first, the existing section 5 will become section 4 and the second DEL command will have to delete section 4 again! If many sections are involved, this could lead to confusion. A printout will show the results clearly at any stage of the process.

Example 8.4.7 Bandpass Design -- 3 op-amp biquad, FQ, ADD Commands

For the final demonstration of the DES (design) command, we will use the three op-amp version of the (infinite-Q) second section (the "1" after "DES" selects the op-amp version of the active RC circuit):

```
COMMAND:
>  des 1 2 1e-8
SECTION NO.  2
    |         |
    |  ┌──────┘
    |  |
    |  |      ┌──────┐
    |  |      R      |       10.55429 kohm
    |  |──R──┬┴┐     |      *** OPEN ***
    |─+─┐    | |     |
    |  | ----- |     |
    |  | \+ -/ C     |       10.00000 nF
    |  |  \ /  |     |
    |  |   V   |     |
    |  |   └───┘     |
    |  |      R      |       12.00000 kohm
    |  |──R──┬┴┐┌┐   |       24.72104 kohm
    |─+─┐    | | | |
    |  | ----- C | |       10.00000 nF
    |  | \+ -/ | | |
    |  |  \ /  | R |      *** OPEN ***
    |  |   V   | | |
    |  |   └───┘└┘ |
    |  |      R      |       12.00000 kohm
    |  └──R──┬┴┐     |      *** OPEN ***
    |───┐    | |     |
    |   ----- |     |
    |   \+ -/ R     |       12.00000 kohm
    |    \ /  |     |
    |     V   |     |
    |     └───┘     |
    |         |
SECTION PROVIDES 180 DEGREES ADDITIONAL PHASE
ADD FEEDBACK PATH FROM HERE TO INPUT OF SECTION  1
```

We are now in a position to illustrate the FQ command:

```
COMMAND:
```

```
> fq
ENTER REQUIRED Q VALUE
> 500
** DONE **
```

We need the PRI command again to observe the results:

```
COMMAND:
>  pri
active bandpass
      RESULTS OF THE LEAP SYNTHESIS
     BIQUADRATIC BLOCK COEFFICIENTS
           IN ASCENDING ORDER

    NUMERATOR       DENOMINATOR
SECTION NO.  1
  0.0000000D+00   7.8956835D+07
  6.2699521D+03   3.9361422D+03
  0.0000000D+00   1.0000000D+00

SECTION NO.  2
  0.0000000D+00   7.8956835D+07
  4.0451377D+03   1.7771532D+01
  0.0000000D+00   1.0000000D+00
FEEDBACK COEFFICIENT =  -8.9067674D-01

SECTION NO.  3
  0.0000000D+00   7.8956835D+07
  6.9996294D+03   3.9361422D+03
  0.0000000D+00   1.0000000D+00
FEEDBACK COEFFICIENT =  -7.9506905D-01
```

The last command we have not as yet demonstrated is the ADD command. We can do that by adding the first delay equalizer section we have just deleted above, back into the circuit:

```
COMMAND:
>  add
ENTER NUMERATOR COEFFICIENTS IN ASCENDING ORDER
>  7.3871553e7 -3.8071236e3 1.
ENTER DENOMINATOR COEFFICIENTS IN ASCENDING ORDER
>  7.3871553e7 3.8071236e3 1.
ENTER FEEDBACK COEFFICIENT
>  0
** DONE **
```

We print the result again to observe the effects of the command:

```
COMMAND:
>  pri
active bandpass

     RESULTS OF THE LEAP SYNTHESIS
     BIQUADRATIC BLOCK COEFFICIENTS
           IN ASCENDING ORDER

    NUMERATOR       DENOMINATOR
SECTION NO.  1
  0.0000000D+00   7.8956835D+07
  6.2699521D+03   3.9361422D+03
  0.0000000D+00   1.0000000D+00

SECTION NO.  2
  0.0000000D+00   7.8956835D+07
  4.0451377D+03   1.7771532D+01
```

```
  0.0000000D+00   1.0000000D+00
FEEDBACK COEFFICIENT =  -8.9067674D-01

SECTION NO.  3
  0.0000000D+00   7.8956835D+07
  6.9996294D+03   3.9361422D+03
  0.0000000D+00   1.0000000D+00
FEEDBACK COEFFICIENT =  -7.9506905D-01
SECTION NO.  4
  7.3871553D+07   7.3871553D+07
 -3.8071236D+03   3.8071236D+03
  1.0000000D+00   1.0000000D+00
FEEDBACK COEFFICIENT =   0.0000000D+00
```

Example 8.4.8 Shaped Lowpass Filter -- FILE command.

The shaped passband that we may obtain using the Optimizing Preprocessor, (see *Section 14* below) can also be implemented in active RC form. Assuming that the transfer function has been saved by S/FILSYN in the file 8X8.QFM on the floppy disk in drive A, we recall this file into the SFILSYN segment of the program and request an active RC synthesis (not shown). This transfer file was also written to a floppy disk in drive A and has the name 8X8.TRF.

Subsequently, we call the ACTIVE segment and select the cascade implementation:

```
C:>active

         ***** S/FILSYN *****
    RELEASE 3.2  VERSION 1  4/1/94

         ** ACTIVE SEGMENT **

Copyright (C) 1983-1995 Dr. George Szentirmai.
            All Rights Reserved.

SYNTHESIS: S, ANALYSIS: A OR END: E
> s
ENTER FILE NAME
> a:8x8
WISH LP-TO-BE CONVERSION? (Y/N)
> n
CASCADE: C, FOLLOW-THE-LEADER: F OR LEAPFROG: L
> c

SELECTED SEQUENCE IS:
NUMERATORS:    I    3   2   1
DENOMINATORS:   4   1   2   3

Shaped active-RC

      RESULTS OF THE CASC SYNTHESIS
     BIQUADRATIC BLOCK COEFFICIENTS
           IN ASCENDING ORDER

    NUMERATOR       DENOMINATOR

SECTION NO.  1
  8.5008020D+03   8.5008020D+03
  0.0000000D+00   1.0000000D+00
  0.0000000D+00   0.0000000D+00


SECTION NO.  2
  9.9192481D+07   9.9192481D+07   TRANSMISSION ZERO
```

```
    0.0000000D+00   1.0022131D+04   3.7495436D+03 HZ
    1.7871549D-01   1.0000000D+00
  SECTION NO.  3
    1.2979699D+08   1.2979699D+08   TRANSMISSION ZERO
    0.0000000D+00   4.0910521D+03   2.4689621D+03 HZ
    5.3935663D-01   1.0000000D+00

  SECTION NO.  4
    1.0490107D+08   1.4193022D+08   TRANSMISSION ZERO
    0.0000000D+00   1.0733473D+03   2.2218260D+03 HZ
    5.3826988D-01   1.0000000D+00
```

The transmission zero sequence has been selected without a prompt by our optimizing algorithm, but can be changed using the PERM command later.

Next we design a few of the sections. The first '1' following the DES command selects the op-amp implementation of the circuit; the second '1' selects section 1:

```
COMMAND:
> des 1 1 10n
SECTION NO.  1
    |       |
    |       R            23.52719 kohm
    |──C──┤             10.00000 nF
    |       R            23.52719 kohm
    |──┐   ┌┴┐
    |  ----- |
    |  \+ -/ R           47.05439 kohm
    |   \ /  |
    |    V   |
    |     └──┘
    |       |
SECTION PROVIDES 180 DEGREES ADDITIONAL PHASE
COMMAND:
> des 2 10n
SECTION NO.  2

    |       |
    |     ┌─┴─┬─┐
    |     R   |   |          5.59549 kohm
    |     |   R   |        *** OPEN ***
    |     |   |   R          7.46179 kohm
    |──R──+───+───┤──┐       28.31298 kohm
    |     |   |   |  |
    |     |   |   C  |       10.00000 nF
    |──R──+───┤   ┌─┴─┐      4.08631 kohm
    |──R──┤──┐    |   |      1.21760 kohm
    |     | ----- | C        10.00000 nF
    |     | \+ -/ | |
    |     |  \ /  R |        12.04102 kohm
    |     R   V   | |        10.00000 kohm
    |     └──┬────┴─┘
    |       |
COMMAND:
> des 3 10m n
SECTION NO.  3
CIRCUIT - TWIN-T: 1 OR NOT: 2
> 2
```

```
|        |
|   ┌────┴┐
|   |     R          4.95483 kohm
├───+──R──┤         14.20254 kohm
|   |     ├─C─┐      10.00000 nF
|   |     C   |      10.00000 nF
├───+──R──┤   |      29.46925 kohm
|   R     |   |       3.70812 kohm
|   ├┐    ├─R─┤      18.36030 kohm
├─R─┤ -----   |       4.34175 kohm
|   | \+ -/   |
|   R  \ /    |      10.00000 kohm
|   |   V     |
|   └────┬────┘
|        |
```

Note that as opposed to earlier versions of the program, we are not prompted for a SPICE file. Instead, we can write a SPICE file explicitly, using the FILE command, but only if all the sections have been designed previously. If any of the sections have been designed more than once, only the last one is available. After we have designed the first three sections, we invoked this FILE com- mand. Since one of the sections has not been designed yet, the program will not let us write any files. We must supply the missing section first:

```
COMMAND:
> file
THE FOLLOWING SECTIONS HAVE NOT BEEN DESIGNED:
 4
COMMAND:
> des 4 10n
SECTION NO.  4
CIRCUIT - TWIN-T: 1 OR NOT: 2
> 2
    |        |
    |   ┌────┴┐
    |   |     R          4.82601 kohm
    ├───+──R──┤          6.96154 kohm
    |   |     ├─C─┐     10.00000 nF
    |   |     C   |     10.00000 nF
    ├───+──R──┤   |     79.50620 kohm
    |   R     |   |      3.71561 kohm
    |   ├┐    ├─R─┤     23.27315 kohm
    ├─R─┤ -----   |      4.33153 kohm
    |   | \+ -/   |
    |   R  \ /    |     10.00000 kohm
    |   |   V     |
    |   └────┬────┘
    |        |
COMMAND:
> file
FILE - ASCII: 1, SPICE: 2 OR SUPER-STAR: 3
> 1
ENTER FILE NAME
> a:8x8
RESISTOR PREFERRED VALUES - NO: 0, 10%: 1, 5%: 2, 2%: 3 OR 1%: 4
> 0
** DONE **

COMMAND:
> file 2
ENTER FILE NAME
> a:8x8
RESISTOR PREFERRED VALUES - NO: 0, 10%: 1, 5%: 2, 2%: 3 OR 1%: 4
> 4
** DONE **
```

Now we can write both an ASCII (documentation) file as well as the SPICE file we need. In both of these files, we may replace all resistor values by the preferred values from several sets. We selected the 1% preferred values for the SPICE file, but retained the exact values for the documentation file. Before continuing with the specific example, we wish to show both the SPICE and the ASCII files we have generated. First the SPICE file:

```
Shaped active-RC

 .AC LIN  50  50.00      2500.
 VIN 1 0 AC 1.0
 .SUBCKT OPAM 1 2 3 4
 ENOM 1 2 3 4 10000.
 .ENDS
 * SECTION NO.  1
 R011    1    2   2.37000E+04
 C011    0    2   1.00000E-08
 R012    2    3   2.37000E+04
 R013    3    7   4.75000E+04
 X011    7    0    0    3  OPAM
 R014    7    8   1.00000E-02
 * SECTION NO.  2
 R021    8   11   5.62000E+03
 R023    8    9   7.50000E+03
 R024    0    9   2.80000E+04
 C021    9   10   1.00000E-08
 R025    0   10   4.12000E+03
 R026    0   11   1.21000E+03
 C022    9   14   1.00000E-08
 R027   10   14   1.21000E+04
 R028   11   14   1.00000E+04
 X021   14    0   11   10  OPAM
 R029   14   15   1.00000E-02
 * SECTION NO.  3
 R031   15   16   4.99000E+03
 R032    0   16   1.43000E+04
 C031   16   21   1.00000E-08
 C032   16   17   1.00000E-08
 R033    0   17   2.94000E+04
 R034   15   18   3.74000E+03
 R035   17   21   1.82000E+04
 R036    0   18   4.32000E+03
 R037   18   21   1.00000E+04
 X031   21    0   18   17  OPAM
 R038   21   22   1.00000E-02
 * SECTION NO.  4
 R041   22   23   4.87000E+03
 R042    0   23   6.98000E+03
 C041   23   28   1.00000E-08
 C042   23   24   1.00000E-08
 R043    0   24   7.87000E+04
 R044   22   25   3.74000E+03
 R045   24   28   2.32000E+04
 R046    0   25   4.32000E+03
 R047   25   28   1.00000E+04
 X041   28    0   25   24  OPAM
 R048   28   29   1.00000E-02
 RL      0   29   1.00000E+09
 .PRINT AC VDB( 29), VP( 29)
 .END
```

The SPICE file does not contain any of the OPEN resistors, but it does contain a terminating resistor of 1 Mohm and several 0.01 ohm resistors that connect the sections. Furthermore, it may contain additional very large resistors that are needed by the SPICE program in order to provide a

DC path to ground from each and every node. The small (0.01 ohm) resistors are useful in feedback cases to split the output node of one section from the input node of the next, thereby facilitating the insertion of the feedback paths, which we need to do manually in the op-amp case.

Next we print the ASCII file:

```
 *** S/FILSYN ***  FILTER PROGRAM

Shaped active-RC
    LOW-PASS FILTER
       FUNCTIONAL INPUT WAS USED
          UPPER PASSBAND EDGE FREQUENCY            =   2.000000 kHz
       SPECIFIED STOPBAND TYPE
          MULTIPLICITY OF ZERO AT INFINITY         =   1
          NUMBER OF FINITE TRANSMISSION ZEROS      =   3
          OVERALL FILTER DEGREE                    =   7
          TRANSMISSION ZEROS

                REAL PART        IMAGINARY PART
             0.0000000D+00       2.2218260D+03
             0.0000000D+00       2.4689621D+03
             0.0000000D+00       3.7495436D+03

     RESULTS OF THE CASC SYNTHESIS
      BIQUADRATIC BLOCK COEFFICIENTS
            IN ASCENDING ORDER

     NUMERATOR       DENOMINATOR
 SECTION NO.  1
   8.5008020D+03   8.5008020D+03
   0.0000000D+00   1.0000000D+00
   0.0000000D+00   0.0000000D+00

 SECTION NO.  2
   9.9192481D+07   9.9192481D+07
   0.0000000D+00   1.0022131D+04
   1.7871549D-01   1.0000000D+00

 SECTION NO.  3
   1.2979699D+08   1.2979699D+08
   0.0000000D+00   4.0910521D+03
   5.3935663D-01   1.0000000D+00

 SECTION NO.  4
   1.0490107D+08   1.4193022D+08
   0.0000000D+00   1.0733473D+03
   5.3826988D-01   1.0000000D+00

     |       |
     |       R            23.52719 kohm
     |──C────|            10.00000 nF
     |       R            23.52719 kohm
     |──┐    ┌─┐
     |  -----  |
     |  \+ -/ R           47.05439 kohm
     |   \ /   |
     |    V    |
     |    └───┘
```

```
|        |
|      R | |          5.59549 kohm
|        | R |       *** OPEN ***
|        |   R        7.46179 kohm
|--R--+--+--|---|    28.31298 kohm
|        |   C   |    10.00000 nF
|--R--+--|---|   |     4.08631 kohm
|        |       | |
|        |       | |
|--R---|         | |   1.21760 kohm
|      | -----   | C  10.00000 nF
|      | \+ -/   | |
|      |  \ /  R |    12.04102 kohm
|      R   V     | |  10.00000 kohm
|        |---|---|
|        |
|    |---|
|    |     R          4.95483 kohm
|----+--R--|         14.20254 kohm
|    |     |--C--|    10.00000 nF
|    |     C     |    10.00000 nF
|----+--R--|       |  29.46925 kohm
|   R       |       |  3.70812 kohm
|   |---|   |--R--|   18.36030 kohm
|--R--| -----       |  4.34175 kohm
|   | \+ -/         |
|   R  \ /          |  10.00000 kohm
|   |   V           |
|   |---|-----------|
|        |
|    |---|
|    |     R          4.82601 kohm
|----+--R--|         6.96154 kohm
|    |     |--C--|    10.00000 nF
|    |     C     |    10.00000 nF
|----+--R--|       |  79.50620 kohm
|   R       |       |  3.71561 kohm
|   |---|   |--R--|   23.27315 kohm
|   | |     |       |
|--R--| -----       |  4.33153 kohm
|   | \+ -/         |
|   R  \ /          |  10.00000 kohm
|   |   V           |
|   |---|-----------|
|        |
```

*** PARTS LIST ***

RESISTORS

R01	23.52719	kohm
R02	23.52719	kohm
R03	47.05439	kohm
R04	5.59549	kohm
R05	7.46179	kohm
R06	28.31298	kohm
R07	4.08631	kohm
R08	1.21760	kohm
R09	12.04102	kohm
R10	10.00000	kohm
R11	4.95483	kohm
R12	14.20254	kohm
R13	29.46925	kohm
R14	3.70812	kohm
R15	18.36030	kohm
R16	4.34175	kohm
R17	10.00000	kohm
R18	4.82601	kohm
R19	6.96154	kohm
R20	79.50620	kohm
R21	3.71561	kohm
R22	23.27315	kohm
R23	4.33153	kohm

```
    R24        10.00000 kohm

  CAPACITORS
    C01        10.00000 nF
    C02        10.00000 nF
    C03        10.00000 nF
    C04        10.00000 nF
    C05        10.00000 nF
    C06        10.00000 nF
    C07        10.00000 nF

  TOTAL NUMBER OF RESISTORS:  24
                 CAPACITORS:  7
                 OP. AMPS:    4
```

As mentioned above, this documentation file now contains a parts list as well. Now we return to the ACTIVE segment and redesign the same function in a leapfrog-feedback form. This time the program prompts us if we accept the computer selected sequence, because we are unable to change this sequence afterwards:

```
COMMAND:
> end
SYNTHESIS: S, ANALYSIS: A OR END: E
> s
ENTER FILE NAME
> a:8x8
WISH LP-TO-BE CONVERSION? (Y/N)
> n
CASCADE: C, FOLLOW-THE-LEADER: F OR LEAPFROG: L
> l
USE COMPUTER-SELECTED ZERO SEQUENCE? (Y/N)
> y

SELECTED ZERO SEQUENCE IS:
 I    1   3   2
WISH TO SEE INTERMEDIATE RESULTS? (Y/N)
> n
           LEAPFROG SYNTHESIS
ex14
      RESULTS OF THE LEAP SYNTHESIS
     BIQUADRATIC BLOCK COEFFICIENTS
           IN ASCENDING ORDER

    NUMERATOR       DENOMINATOR
SECTION NO.  1
  7.9625614D+03   1.2388190D+04
  0.0000000D+00   1.0000000D+00
  0.0000000D+00   0.0000000D+00

SECTION NO.  2
 -9.3618445D+07   1.3804087D+08   TRANSMISSION ZERO
  0.0000000D+00   0.0000000D+00   2.2218260D+03 HZ
 -4.8037631D-01   1.0000000D+00
FEEDBACK COEFFICIENT =  -7.3862363D-01

SECTION NO.  3
  3.7641004D+07   1.3389786D+08   TRANSMISSION ZERO
  0.0000000D+00   0.0000000D+00   3.7495436D+03 HZ
  6.7817947D-02   1.0000000D+00
FEEDBACK COEFFICIENT =  -2.6135072D-01

SECTION NO.  4
 -3.6332213D+08   2.0630067D+08   TRANSMISSION ZERO
  0.0000000D+00   1.2689373D+04   2.4689621D+03 HZ
 -1.5097438D+00   1.0000000D+00
FEEDBACK COEFFICIENT =  -1.0004814D+00
```

This is the correct transfer function, as an analysis would show, but if we try the DES command, we would find the last section to be nonrealizable. This section has a parameter combination for which we currently have no implementation. The solution to this problem is to select another zero sequence and after several trial runs, we have found one that worked. We repeated the complete design of this leapfrog implementation and wrote the results to another ASCII file, which is shown below:

```
 *** S/FILSYN ***  FILTER PROGRAM

Shaped active-RC
    LOW-PASS FILTER
       FUNCTIONAL INPUT WAS USED
          UPPER PASSBAND EDGE FREQUENCY            =   2.000000 kHz
       SPECIFIED STOPBAND TYPE
          MULTIPLICITY OF ZERO AT INFINITY         =   1
          NUMBER OF FINITE TRANSMISSION ZEROS      =   3
          OVERALL FILTER DEGREE                    =   7
          TRANSMISSION ZEROS
                REAL PART        IMAGINARY PART
             0.0000000D+00       2.2218260D+03
             0.0000000D+00       2.4689621D+03
             0.0000000D+00       3.7495436D+03

    RESULTS OF THE LEAP SYNTHESIS
     BIQUADRATIC BLOCK COEFFICIENTS
          IN ASCENDING ORDER
    NUMERATOR       DENOMINATOR
 SECTION NO.  1
   5.9822850D+07   2.1924792D+08
   0.0000000D+00   7.9065941D+03
   2.4858706D-01   1.0000000D+00

 SECTION NO.  2
  -1.2604617D+08   1.3701934D+08
   0.0000000D+00   0.0000000D+00
  -6.4676993D-01   1.0000000D+00
 FEEDBACK COEFFICIENT =  -2.7209621D+00

 SECTION NO.  3
   5.5491801D+07   1.3498238D+08
   0.0000000D+00   0.0000000D+00
   9.9979800D-02   1.0000000D+00
 FEEDBACK COEFFICIENT =  -1.3369131D-01

 SECTION NO.  4
  -1.5178670D+04   9.9480798D+03
   0.0000000D+00   1.0000000D+00
   0.0000000D+00   0.0000000D+00
 FEEDBACK COEFFICIENT =  -2.6744664D-01
```

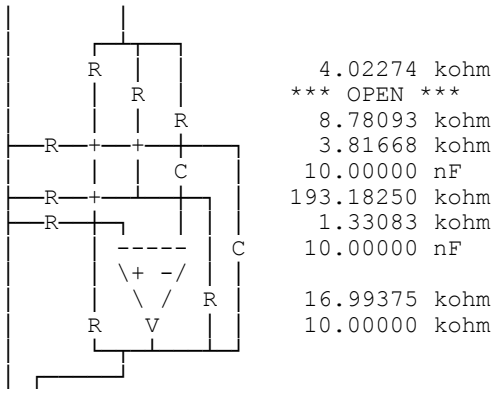

```
     | |        ┌──────┐
     | |        R      |        8.20000 kohm
     | ├──R──┬─┬─┐     |        8.91387 kohm
     ├─+─┐   | | |     |
     | | -----  |      |
     | | \+ -/ C      |       10.00000 nF
     | |  \ /   |      |
     | |   V    |      |
     | |   └────┘      |
     | |        R      |        8.90029 kohm
     | ├──R──┬─┬─┬─┐   |      *** OPEN ***
     ├─+─┐   | | | |   |
     | | ----- C | |   |       10.00000 nF
     | | \+ -/   | |   |
     | |  \ /    | R   |      *** OPEN ***
     | |   V     | |   |
     | |   └─────┴─┘   |
     | |        R      |        8.20000 kohm
     | └──R──┬─┐        |       12.67839 kohm
     ├───┐   | |        |
     |   -----  |       |
     |   \+ -/ R        |        8.20000 kohm
     |    \ /   |       |
     |     V    |       |
     |     └────┴───┘   |
     |          |
     |          |
ADD FEEDBACK FROM HERE TO THE INPUT OF SECTION  1
COEFFICIENT = -2.72096E+00
     | ┌──────┘
     | |
     | |        ┌──────┐
     | |        R      |        8.20000 kohm
     | ├──R──┬─┬─┐     |       19.94629 kohm
     ├─+─┐   | | |     |
     | | -----  |      |
     | | \+ -/ C      |       10.00000 nF
     | |  \ /   |      |
     | |   V    |      |
     | |   └────┘      |
     | |        R      |        9.03460 kohm
     | ├──R──┬─┬─┬─┐   |      *** OPEN ***
     ├─+─┐   | | | |   |
     | | ----- C | |   |       10.00000 nF
     | | \+ -/   | |   |
     | |  \ /    | R   |      *** OPEN ***
     | |   V     | |   |
     | |   └─────┴─┘   |
     | |        R      |        8.20000 kohm
     | └──R──┬─┐        |       82.01656 kohm
     ├───┐   | |        |
     |   -----  |       |
     |   \+ -/ R        |        8.20000 kohm
     |    \ /   |       |
     |     V    |       |
     |     └────┴───┘   |
     |          |
     |          |
ADD FEEDBACK FROM HERE TO THE INPUT OF SECTION  2
COEFFICIENT =  1.33691E-01
     |          |
     |        R            20.10438 kohm
     ├──C──┤               10.00000 nF
     |        R            20.10438 kohm
     ├───┐   ┌┴┐
     |   -----  |
     |   \+ -/ R           61.35009 kohm
     |    \ /   |
     |     V    |
     |     └────┘
     |          |
```

```
ADD FEEDBACK FROM HERE TO THE INPUT OF SECTION  3
COEFFICIENT =  2.67447E-01

              *** PARTS LIST ***
RESISTORS
  R01         4.02274 kohm
  R02         8.78093 kohm
  R03         3.81668 kohm
  R04       193.18250 kohm
  R05         1.33083 kohm
  R06        16.99375 kohm
  R07        10.00000 kohm
  R08         8.20000 kohm
  R09         8.91387 kohm
  R10         8.90029 kohm
  R11         8.20000 kohm
  R12        12.67839 kohm
  R13         8.20000 kohm
  R14         8.20000 kohm
  R15        19.94629 kohm
  R16         9.03460 kohm
  R17         8.20000 kohm
  R18        82.01656 kohm
  R19         8.20000 kohm
  R20        20.10438 kohm
  R21        20.10438 kohm
  R22        61.35009 kohm

CAPACITORS
  C01        10.00000 nF
  C02        10.00000 nF
  C03        10.00000 nF
  C04        10.00000 nF
  C05        10.00000 nF
  C06        10.00000 nF
  C07        10.00000 nF

TOTAL NUMBER OF RESISTORS:  22
                CAPACITORS:  7
                OP. AMPS:    8
```

The figure above has been compressed to save space, the actual printout is a bit more elongated. The final comment about this file is the fact that the feedback paths are still not added in the form of appropriate circuitry. Rather, in preparation of doing that, the feedback coefficients are now recomputed in a manner that takes into account the phase reversals and possible multipliers of the implementations used and added as comments. See also *Application Note 6*.

Example 8.4.9 -- DES command, ASCII and SPICE files

In this example we will consider the capacitor-transconductance amplifier realization of filters and the resulting SPICE files.

The filter is a simple, 6-th order bandpass with passband from 10KHz to 20KHz. Its cascade as well as leapfrog syntheses are already stored in two files, hence we start by recalling the first one:

```
C:>active

         ***** S/FILSYN *****
    RELEASE 3.2  VERSION 1  4/1/94

         ** ACTIVE SEGMENT **
```

```
Copyright (C) 1983-1995 Dr. George Szentirmai.
            All Rights Reserved.
SYNTHESIS: S, ANALYSIS: A OR END: E
> a
READ DATA FROM FILE? ENTER FILE NAME OR: N
> testc

test
      RESULTS OF THE CASC SYNTHESIS
     BIQUADRATIC BLOCK COEFFICIENTS
           IN ASCENDING ORDER
    NUMERATOR       DENOMINATOR
SECTION NO.  1
  0.0000000D+00   1.1193934D+10
  6.9110464D+04   6.9081056D+04
  0.0000000D+00   1.0000000D+00

SECTION NO.  2
  0.0000000D+00   3.2460414D+09
  6.0315622D+04   2.9007918D+04
  0.0000000D+00   1.0000000D+00

SECTION NO.  3
  1.5978445D+10   1.7434276D+10   TRANSMISSION ZERO
  0.0000000D+00   1.9828769D+04   2.5000000D+04 HZ
  6.4758200D-01   1.0000000D+00
```

Next we use the DES command and select the OTA (Operational Transconductance Amplifier) implementation:

```
COMMAND:
> des
ACTIVE COMPONENT - OP-AMP: 1 OR OTA: 2
> 2
ENTER CAPACITANCE VALUE
> 10n
```

No other data is required, the whole filter will be implemented and the results are as follows:

```
SECTION NO.:  1
    |         |
    |────┐    |
    |    -----
    |    \  +/         691.10470 umho
    |     \ /
    |      -
    |      └──┬──┐
    |────┐    |  |
    |    -----  |
    |    \+  /  |      690.81050 umho
    |     \ /   |
    |      -    |
    |      └──┬──┤
    |────┐    |  |
    |    -----  |
    |    \  +/  |        1.05801 mmho
    |     \ /   |
    |      -    |
    |──C──┘┐    |       10.00000 nF
    |────┐    |  |
    |    -----  |
    |    \+  /  |        1.05801 mmho
    |     \ /   |
    |      -    |
```

```
     ├──C────┴──────┘       10.00000 nF
     │          │
SECTION NO.:  2
     ├─────┐    │
     │     -----
     │     \  +/         603.15620 umho
     │      \ /
     │       -
     │       └──────┐
     ├─────┐    │    │
     │     -----     │
     │     \+  /     │  290.07920 umho
     │      \ /      │
     │       -       │
     │       └──────┐│
     ├─────┐    │    │
     │     -----     │
     │     \  +/     │  569.74040 umho
     │      \ /      │
     │       -       │
     ├──C────┴──┐     │   10.00000 nF
     ├─────┐    │    │
     │     -----     │
     │     \+  /     │  569.74040 umho
     │      \ /      │
     │       -       │
     ├──C────┴──────┘       10.00000 nF
     │          │
SECTION NO.:  3
     │          │
     ├─────┐    │
     │     -----
     │     \  +/           1.00000 mmho
     │      \ /
     │       -
     ├──R────┴──┐          1.00000 kohm
     ├─────┐    ├──────┐
     │     -----      │
     │     \  +/      │   1.71328 mmho
     │      \ /       │
     │       -        │
     │       └────┐   │
     ├─────┐    ┌─+──┤
     │     -----  │   │
     │     \+  /  │   │    .00000  mho
     │      \ /   │   │
     │       -    │   │
     │       └────+─┐ │
     ├─────┐    │ │ │ │
     │     -----  │ │ │
     │     \+  /  │ │ │   1.64925 mmho
     │      \ /   │ │ │
     │       -    │ │ │
     ├────C────┴──┘ │ │  10.00000 nF
     ├─────┐    │   │ │
     │     -----      │
     │     \  +/      │   1.44016 mmho
     │      \ /       │
     │       -        │
     │       └──────┐ │
     ├─────┐    │ │  │
     │     -----  │   │
     │     \  +/  │   │ 362.36180 umho
     │      \ /   │   │
     │       -    │   │
     │       └────┴─C─┘  10.00000 nF
     │          │
SECTION MULTIPLIER = -1.1335E+00
```

The symbol for the amplifier is a bit different, and of course, we have the transconductance parameter computed and printed. Also, section indicators are printed and if a realization has an additional non-unity gain, its value is also printed. The resistor in section 3 can be implemented by an OTA with a feedback around it, and is used simply as a shorthand notation, to simplify an already complex circuit. Next we save this design data in an ASCII file, which we do not show, since it contains nothing different, and then delete the filter data by using the END command:

```
COMMAND:
> file
FILE - ASCII: 1, SPICE: 2 OR SUPER-STAR: 3
> 1
ENTER FILE NAME
> a:ex4c
** DONE **
COMMAND:
> end
SYNTHESIS: S, ANALYSIS: A OR END: E
```

Selecting the analysis (A) option, we can now recall the leapfrog synthesis of the same filter:

```
> a
READ DATA FROM FILE? ENTER FILE NAME OR: N
> testl
test
      RESULTS OF THE LEAP SYNTHESIS
     BIQUADRATIC BLOCK COEFFICIENTS
           IN ASCENDING ORDER

    NUMERATOR       DENOMINATOR
SECTION NO.  1
  6.5553368D+09   1.2410677D+10
  0.0000000D+00   5.8953312D+04
  0.0000000D+00   1.0000000D+00

SECTION NO.  2
 -7.3071387D+09   1.2023302D+10   TRANSMISSION ZERO
  0.0000000D+00   0.0000000D+00   2.5000000D+04 HZ
 -2.9614718D-01   1.0000000D+00
FEEDBACK COEFFICIENT =  -1.2935827D+00

SECTION NO.  3
  0.0000000D+00   9.1749330D+09
  0.0000000D+00   7.4513727D+04
 -1.7571544D+00   1.0000000D+00
FEEDBACK COEFFICIENT =  -5.0676088D-01
```

Selecting the transconductance amplifier realization once more, we obtain the following circuit:

```
COMMAND:
> des 2 10n
SECTION NO.:  1
    ├────┐   │
    │    -----
    │    \  +/          1.11195 mmho
    │     \ /
    │      -
    │      └───┐
    ├────┐   ┌─+─┐
    │    ----- │ │
    │    \  +/ │ │       2.10517 mmho
    │     \ /  │ │
```

```
     |        -    | |
     |---C---|-----| |       10.00000 nF
     |       |     |-----|
     |      -----        |
     |      \  +/        |      589.53310 umho
     |       \ /         |
     |        -          |
     |---C---|-----|     |       10.00000 nF
     |       |           |
SECTION MULTIPLIER = -1.0000E+00
SECTION NO.:  2
     |       |
     |-------|           |
     |      -----
     |      \  +/           1.00000 mmho
     |       \ /
     |        -
     |---R---|-----|       |   1.00000 kohm
     |-------|           |-------|
     |      -----        |       |
     |      \  +/        |       |  1.88007 mmho
     |       \ /         |       |
     |        -          |       |
     |        |-------|  |       |
     |-------|       |-+-------|
     |      -----    |   |       |
     |      \+  /    |   |       |   .00000  mho
     |       \ /     |   |       |
     |        -      |   |       |
     |        |-------+-|  |       |
     |-------|       | | |  |       |
     |      -----    | | |  |       |
     |      \+  /    | | |  |       |  1.44238 mmho
     |       \ /     | | |  |       |
     |        -      | | |  |       |
     |---C---|-------| | |  |       |  10.00000 nF
     |-------|       | | |  |       |
     |      -----    | | |  |       |
     |      \  +/    | | |  |       |  1.31240 mmho
     |       \ /     | | |  |       |
     |        -      | | |  |       |
     |        |-------| | |  |       |
     |-------|       | | |  |       |
     |      -----    | | |  |       |
     |      \  +/    | | |  |       |  574.42380 umho
     |       \ /     | | |  |       |
     |        -      | | |  |       |
     |        |-------| |-C-|       |  10.00000 nF
     |       |           |
FEEDBACK PATH FROM HERE TO INPUT OF SECTION  1
SECTION MULTIPLIER =  2.1447E+00
SECTION NO.:  3
     |       |
     |-------|           |
     |      -----
     |      \+  /           1.75715 mmho
     |       \ /
     |        -
     |---R---|-------|       1.00000 kohm
     |-------|       |
     |      -----    |
     |      \+  /    |      863.21340 umho
     |       \ /     |
     |        -      |
     |---C---|-------| |     10.00000 nF
     |-------|       | |
     |      -----    | |
     |      \  +/    | |     863.21340 umho
```

```
     |      \ /   | |
     |       -    | |
     |        └────+─┤
     ├──────┐    ┌─┘ |
     |     -----     |
     |     \  +/     |        1.03096 mmho
     |      \ /      |
     |       -       |
     ├────C──┴──┐    |       10.00000 nF
     |         |     |
     ├──────┐  |     |
     |     -----     |
     |     \+  /     |        1.03096 mmho
     |      \ /      |
     |       -       |
     |        └──────┘
     |          |
FEEDBACK PATH FROM HERE TO INPUT OF SECTION  2
SECTION MULTIPLIER = -1.0000E+00
```

The amplifier with the zero transconductance value will naturally be left out; the SPICE file already takes this fact into account.

Otherwise, this circuit is similar and the only difference is the flag to indicate where to put the feedback paths necessary for this implementation. These paths are simple to implement, it is just difficult to show on the printout. As a matter of fact, the SPICE file written by the program *will* show the OTA's implementing these paths. To show this, let us look at the generated SPICE file:

```
test
.AC LIN  51  5000.      .2500E+05
VIN 1 0 AC 1.0
* SECTION NO.  1
R01A  0  1         1.0000E+09
G01A  2  0  1  0   1.1120E-03
G01B  2  0  3  0   2.1052E-03
G01C  3  0  3  2   5.8953E-04
C01A  2  0         1.0000E-08
C01B  3  0         1.0000E-08
R01B  0  2         1.0000E+09
* SECTION NO.  2
R02A  0  3         1.0000E+09
G02A  4  0  3  0   1.0000E-03
G02B  5  0  4  0   1.8801E-03
G02D  5  0  0  6   1.4424E-03
G02E  6  0  5  0   1.3124E-03
G02F  6  0  6  0   5.7442E-04
R02B  4  0         1.0000E+03
R02C  0  5         1.0000E+09
C02A  5  0         1.0000E-08
C02B  6  4         1.0000E-08
G02G  2  0  6  0   6.7067E-04
* SECTION NO.  3
R03A  0  6         1.0000E+09
G03A  9  0  0  6   1.7572E-03
G03B  7  0  0  9   8.6321E-04
G03C  9  0  7  0   8.6321E-04
G03D  8  0  7  0   1.0310E-03
G03E  9  0  0  8   1.0310E-03
R03B  9  0         1.0000E+03
R03C  0  7         1.0000E+09
R03D  0  8         1.0000E+09
C03A  7  0         1.0000E-08
C03B  8  0         1.0000E-08
G03G  4  0  9  0   2.3628E-04
RL      0    9   1.00000E+09
```

```
.PRINT AC VDB(  9), VP(  9)
.END
```

The operational transconductance amplifiers G02G and G03G implement the proper feedback necessary for this leapfrog circuit, and an analysis performed by one of the many SPICE programs easily confirms the validity of this design.

The last comment we wish to make refers to those resistors in the above file of value 1.e9 ohms. These are not part of the filter; they are necessitated by the needs of SPICE, which makes it mandatory for each node to have a DC path to ground. These resistors implement these DC paths.

A few additional resistors with reasonable values may also show up both in the printout as well as in the SPICE files. These are significant, but used only as a shorthand representation, because the OTA that can be used to implement them, would unduly complicate an already complex circuit.

For instance, a resistor of resistance 'val' between node 'x' and ground (node 0), may be replaced in the SPICE file by the line:

Gnnn x 0 0 x val1

where val1 = 1.0/val.

Occasionally, we may encounter a negative transconductance value for an OTA, even though we paid particular attention to avoid it. This represents no problem, it simply means that the input leads of the amplifier need to be interchanged. In the SPICE file we need to interchange the 3rd and 4th nodes in the line representing this OTA.

Finally, we wish to point out, that while we have shown a grounded circuit for all of our designs, these can easily be converted to a fully symmetrical, double-sided form.

Notes:

Notes: